DVT Pro 98660 TBS

90cm Vertical Decorative Hood in full glass design and FreshAir function



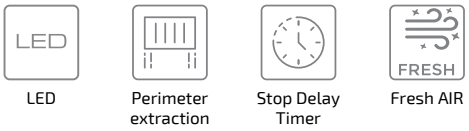

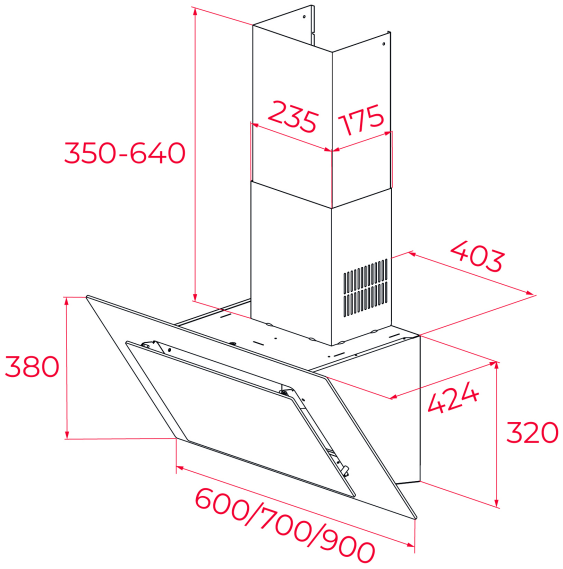

المرجع

REF: 112930043 **EAN:** 8434778013252

ميزات

Urban Colors Edition
Decorative vertical hood
Touch control with display
FreshAir function
3 speeds + 1 intensive
Intensive speed exhaust capacity (m3/h): 698
Max speed exhaust capacity (m3/h): 584
Min speed exhaust capacity (m3/h): 307
Intensive speed sound level (dBA): 74
Max speed sound level (dBA): 68
Min speed sound level (dBA): 52
2 LED lamps
2 Aluminum Filters
Stop delay timer
Filer saturation indicator
Anti-return valve included
Outlet reduction included
Optional recirculation kit with tube cover installation: CFH 15200 L2C
Optional regenerative recirculation kit with tube cover installation: RFH 15200 L2C
Optional recirculation kit without tube cover installation: CFH 15200 O2C
Optional regenerative recirculation kit without tube cover installation: FH 15200 O2C
Optional Charcoal Filter: C1RTK
Optional Regenerative filter: R1RTK

الأبعاد

ارتفاع المنتج (مم): 800-1100
عرض المنتج (مم): 900
عمق المنتج (مم): 412
طول المنتج (مم):
الوزن الصافي (كجم): 16,2

المواصفات التقنية

Energy Efficiency Class: A+
Noise (LwA) Min Speed (dB): 61
Noise (LwA) Max Speed (dB): 72
Noise (LwA) Boost Speed (dB): 74
Ø Outlet (mm): 150

لون

112930043 أسود