DirectSense IZF 68700 MST

60cm DirectSense with FullFlex Induction with temperature sensors

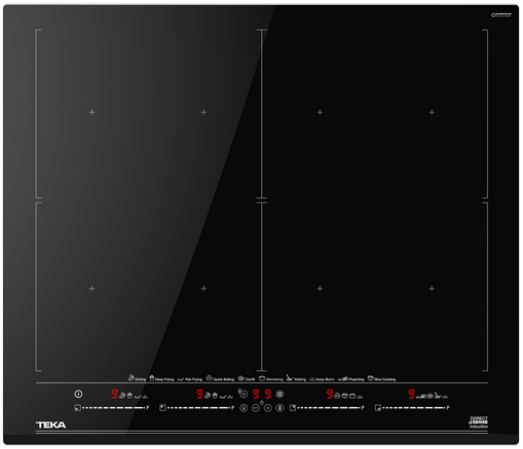


MultiSlider


Autolock


Power


Power Plus


Easy Installation

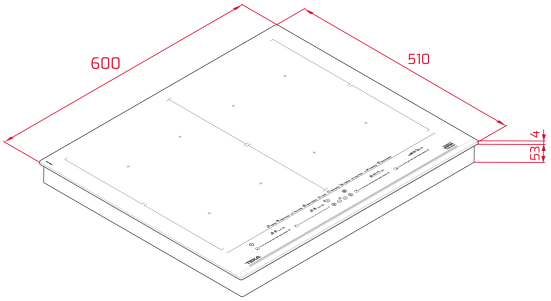

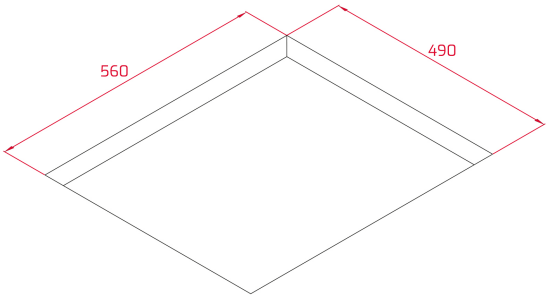

المرجع

REF: 112500037 **EAN:** 8434778016208

ميزات

Urban Colors Edition
MasterSense Series
FullFlex Induction hob
Direct functions with temperature sensors: Rice cooking, confit, poaching, grilling, pan frying, deep frying, quick boiling,keep warn, simmering and melting.
Touch Control MultiSlider
4 cooking zones
4 zones Ø 262,5 X 195 mm
Ceramic glass surface
Auto-lock safety system
Cooking timer
Power plus
Child lock
Residual heat indicator
Power management
Easy installation kit
Maximum nominal power 7400 W
Optional: Grilling plate
Optional: Teppanyaki

الأبعاد

ارتفاع المنتج (مم): 57
عرض المنتج (مم): 600
عمق المنتج (مم): 510
طول المنتج (مم):
الوزن الصافي (كجم): 13,21

المواصفات التقنية

Power rate (V): 220-240
Frequency (Hz): 50/60
Maximum Nominal Power (W): -

لون

112500037 زجاج أسود

كفاءة الطاقة

Power consumption in standby mode (W): -
Time to reach standby mode (min): 1