RLF 85950 GBK

Side by Side refrigerator with wine cooler





Motor inverter | On Holidays function | Easy 90 | LED

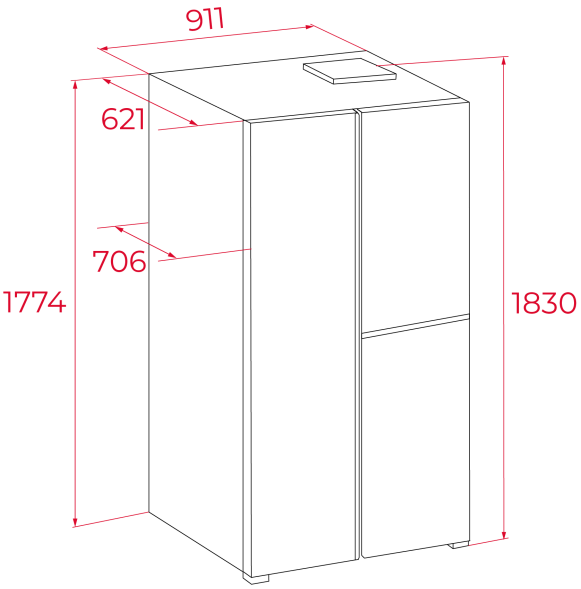

المرجع

REF: 113430074 **EAN:** 8434778030426

ميزات

Side by Side refrigerator with wine cooler
Full No frost
Inverter motor
Outer control display
Electronic adjustable thermostat
Capacity: 6 bottles in the refrigerator, 18 bottles in the wine cooler
1 Vegetable drawer
1 Multipurpose compartment
3 safety glass shelves with mettalic finishing
On holidays function
Metal Cooling
Integrated handle
Acoustic alarm
Front adjustable feet
Freezer inner shelves
LED illumination
Easy 90º
Climate class: SN/N/ST
Total capacity: 548 litres
Bottle rack, twister ice maker and ice cube tray included

الأبعاد

ارتفاع المنتج (مم): 1830
عرض المنتج (مم): 911
عمق المنتج (مم): 706
طول المنتج (مم):
الوزن الصافي (كجم): 113

المواصفات التقنية

Energy efficiency class (UE 2019/2016): E
Climate Class: SN/N/ST
Energy Consumption (Kw/day): 0.505
Annual Consumption (kWh/year): 327
Freezing Capacity: 14
Noise Level (dBA): 38
Power rate (V): 220-240V
Frequency (Hz): 50HZ

لون

113430074 زجاج أسود