SQUARE 72.40 TG BK

Undermount Tegranite Sink with one bowl



200mm

Colour Intensity

Easy_Clean

Food_Safe

Scratch_Proof

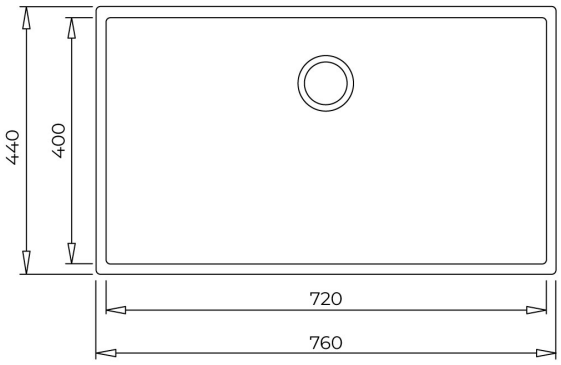

المرجع

REF: 115230015 **EAN:** 8434778007329

ميزات

Tegranite+ sink, One bowl Undermount installation High resistance surface to impacts, thermal shocks and high temperatures Excellent UV resistance against decoloring Bacteria-free surface very easy to clean, 80% quartz and resins 3½" manual basket waste with overflow and siphon 80 cm base unit Thickness: 8 mm Packaging: Individual carton box

الأبعاد

ارتفاع المنتج (مم):
عرض المنتج (مم): 440
عمق المنتج (مم): 200
طول المنتج (مم): 760
الوزن الصافي (كجم): 10,83

لون

	115230015	أسود
	115230016	رمادي حجري