KIT VS/CP COLOR WH

Frontal glass for plate warmer and vacuum sealing machine in white



REFERENCE

REF: 111890003 **EAN:** 8434778008494

FEATURES

Frontal panel for plate warmer and vacuum sealing drawers
White finish

DIMENSIONS

Product height (mm): 140
Product width (mm): 595
Product depth (mm): 4
Product length (mm):
Net weight (Kg): 1.4

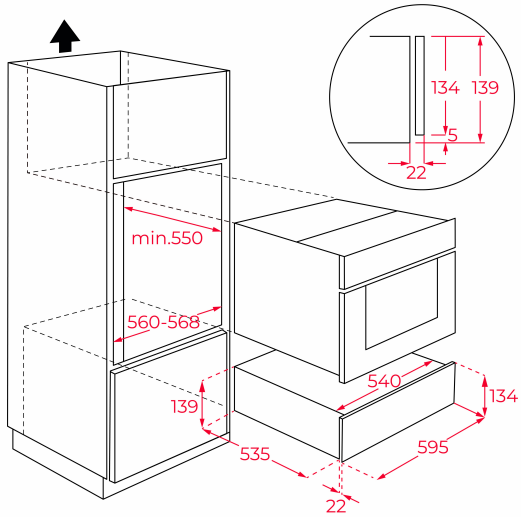

TECHNICAL DETAILS

Energy Efficiency Class: -
Power rate (V): -
Frequency (Hz): -
Maximum Nominal Power (W): -

COLOURS

	111890003	White Glass
	111890002	Black glass
	111490016	Black Matt