DFI 46700 ME

Fully Integrated Dishwasher with 14 Place Settings and 7 Washing Programs

Eco Function

Extra Dry function

Multi Cleaner

AquaLogic

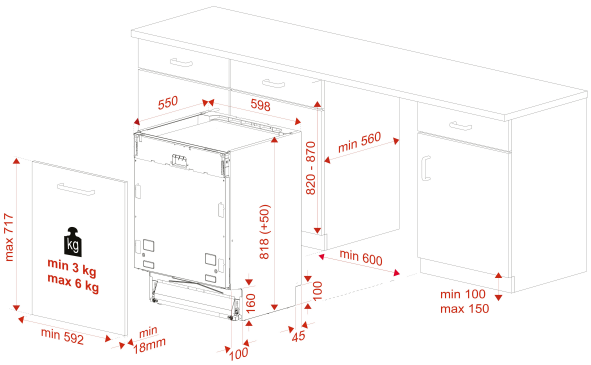

REFERENCE

REF: 114270010 EAN: 8434778013627

FEATURES

Fully integrated dishwasher
Electronic control panel with white LED display
Place Settings : 14
Washing programs : 7
Washing temperatures : 35°, 40°, 50°, 65°, 70° C
AquaStop safety system
SmartSensor mesure the level of dirtiness
MultiCleaner Sensor
PushUp system with 3 positions
FlexiSet4 lower basket
Fast programs: 1Hour and Mini 30
Special programas:AutoClean
Special functions: Half load, Express and Power Wash
Extra Drying function
Column installation
Delay timer 1-24h
Low salt and rinse indicator
Noise level: 46 dBA

DIMENSIONS

Product height (mm): 818
Product width (mm): 598
Product depth (mm): 550
Product length (mm):
Net weight (Kg): 35,9

TECHNICAL DETAILS

Energy Efficiency Class: A++
Energy Consumption (Kw/day): -
Water consumption (litres/year): 2660
Noise Level (dBA): 46
Power rate (V): 220-240
Frequency (Hz): 50

COLOURS

114270010 Black