ICO 915 Titanium

Metallic Edition single lever tap with revolutionary open spout concept

Anti-Scale Aerator | Fingerprint-Proof | Swivel_Spout | PVD

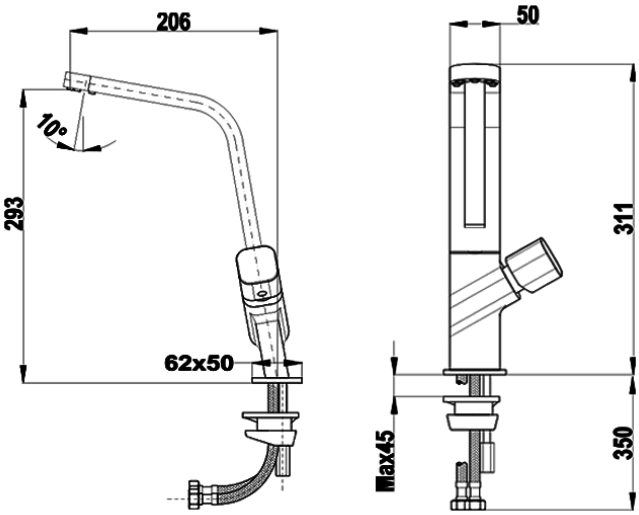

REFERENCE

REF: 116030031 EAN: 8434778009231

FEATURES

Metallic Edition, Titanium Collection
High spout kitchen tap
Revolutionary open spout concept
Swivel Spout
Five anti-scale aerators
3/8" - 1/2" flexible inlet pipes

DIMENSIONS

Product height (mm): 311
Product width (mm):
Product depth (mm):
Product length (mm):
Net weight (Kg): 1,92

COLOURS

116030031	Titanium
116030009	Brass
116030009	Chrome