YZC 32600
TeppanYaki VarioPro Series

Easy
Installation

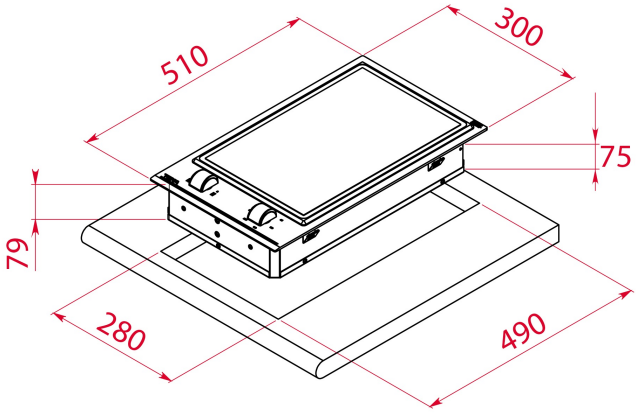

REFERENCE

REF: 112660000 EAN: 8434778014846

FEATURES

VarioPro Series
Modular teppanyaki hob
Frontal control knobs with ergonimic design
2 cooking zones
2 zones Ø 376 X 118 mm
Ceramic glass surface
Easy installation kit
Maximum nominal power 2400 W

DIMENSIONS

Product height (mm): 79
Product width (mm): 300
Product depth (mm): 510
Product length (mm):
Net weight (Kg): 9,3

TECHNICAL DETAILS

Power rate (V): 220-240
Frequency (Hz): 50/60
Maximum Nominal Power (W): -

COLOURS

112660000 Black glass

ENERGY EFFICIENCY

Power consumption in standby mode (W): -
Time to reach standby mode (min): -