CLC 85-G1 GM BM

Infinity G1 coffee machine. Special edition by Italdesign Giugiaro





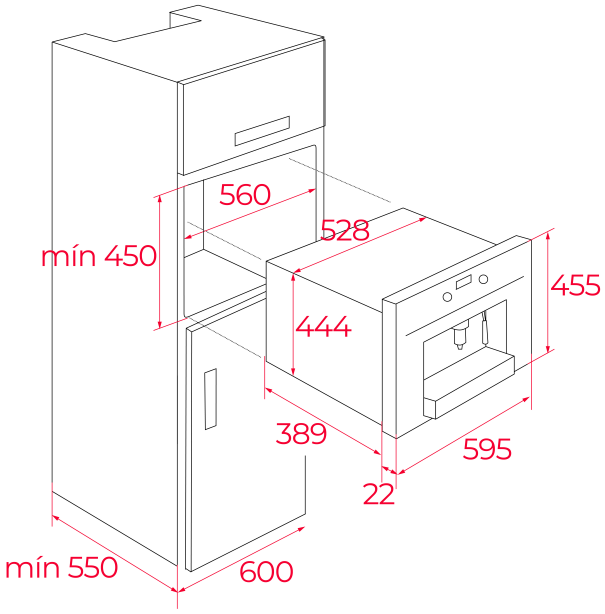

REFERENCE

REF: 111630007 **EAN:** 8434778028027

FEATURES

Infinity G1 special edition
Designed in Italy by Italdesign Giugiaro
Automatic built-in coffee machine
Self-cleaning function
Intensity and coffee size regulation
Touch control display with knobs
30 automatic programs
Capacity: 2 cups at once
Adjustable height system for different cup sizes
Milk frother and hot water pipe
Availability for ground coffee
Integrated steel grinder for natural coffee beans
Coffee beans container, 200 grams capacity
15 bar pump pressure
1.8 litres water tank
Waste container
Descaling function
Installation with telescopic rails for easy pull out of the coffee maker

DIMENSIONS

Product height (mm): 455
Product width (mm): 595
Product depth (mm): 412
Product length (mm):
Net weight (Kg): 23

TECHNICAL DETAILS

Power rate (V): 220-240
Frequency (Hz): 50/60
Maximum Nominal Power (W): 1350

COLOURS

111630007 Black Matt