MY1

Professional Kitchen Tap Flexible Mixer





Anti-Scale Aerator



High_Resistance



Pull_Down_Shower



Swivel_Spout

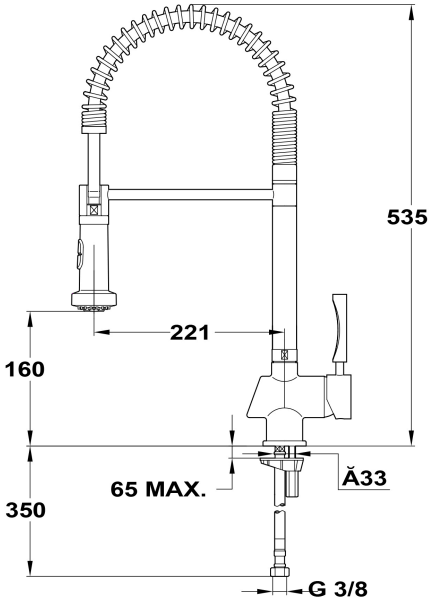

REFERENCE

REF: 1816002 **EAN:** 8421152043318

FEATURES

Professional kitchen tap
Swivel and flexible spout
Anti-scale aerator
Pull-down shower 2 functions: normal & shower spray
Cartridge with ceramic discs of high resistance
Highly precise temperature control
Greater handling sensitivity
High resistant flexible spring
Stainless steel flexible hose reinforced with plastic for better protection and easy cleaning
3/8" flexible inlet pipes

DIMENSIONS

Product height (mm): 535
Product width (mm):
Product depth (mm):
Product length (mm):
Net weight (Kg): 3,2

COLOURS

1816002 Chrome