DSJ 980

90cm A Decorative Hood with EcoPower motor





LED

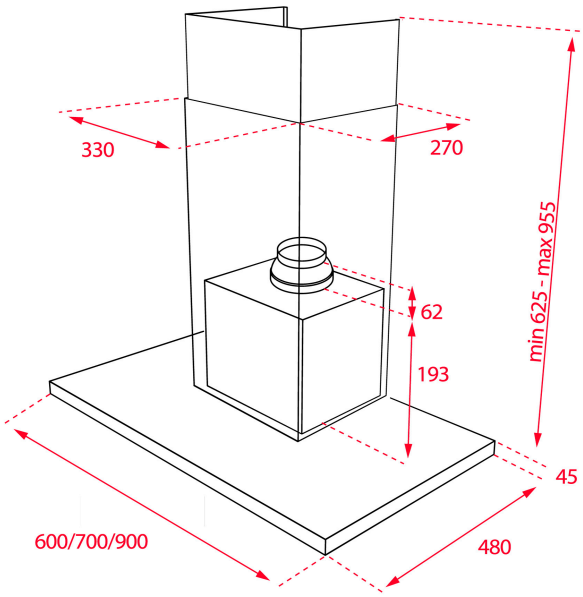

REFERENCE

REF: 40484821 **EAN:** 8421152157329

FEATURES

Decorative horizontal hood
Electronic control with display
4 speeds
Free Outlet exhaust capacity (m3/h): 638
Max speed exhaust capacity (m3/h): 614
Min speed exhaust capacity (m3/h): 268
Max speed sound level (dBA): 66
Min speed sound level (dBA): 48
1 LED lamp
3 Aluminum filters
Operating pilot light
Anti-return valve included
Outlet reduction included
Optional recirculation kit with tube cover installation: D1CTP
Optional Charcoal Filter: D1C

DIMENSIONS

Product height (mm): 670-1000
Product width (mm): 900
Product depth (mm): 480
Product length (mm):
Net weight (Kg): 15,33

TECHNICAL DETAILS

Energy Efficiency Class: C
Noise (LwA) Min Speed (dB): 48
Noise (LwA) Max Speed (dB): 66
Noise (LwA) Boost Speed (dB): N/A
Ø Outlet (mm): 150

COLOURS

40484821 Stainless Steel