Classic 1B 1D

Inset stainless steel sink with one bowl and one drainer



Lifetime warranty

Hygiene

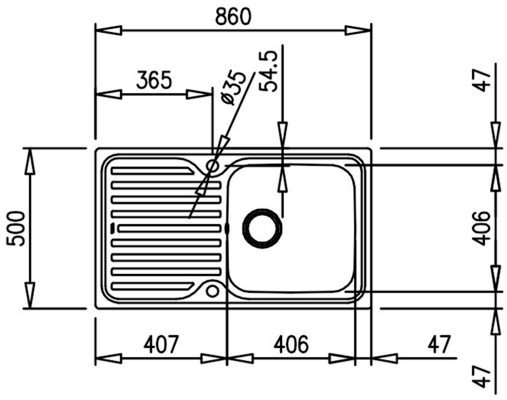

REFERENCE

REF: 10119013 **EAN:** 8421152019283

FEATURES

Classic Series
Stainless steel sink
One bowl and one drainer
Inset installation
3½" manual basket waste with siphon
190 mm deep bowl
50 cm base unit

DIMENSIONS

Product height (mm):
Product width (mm): 500
Product depth (mm): 190
Product length (mm): 860
Net weight (Kg): 4,06

COLOURS

10119013 Stainless Steel