DPL 1185 Island

110cm Island Hood with EcoPower motor





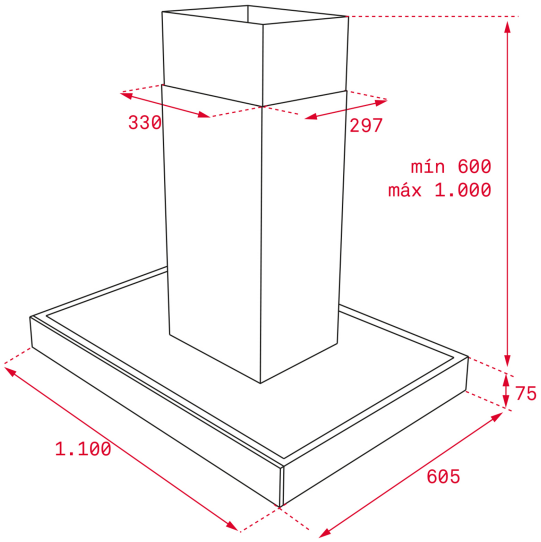

REFERENCE

REF: 40483173 **EAN:** 8421152145784

FEATURES

Decorative horizontal island hood
Touch control
Rim extraction
3 speeds + 1 intensive
Free Outlet exhaust capacity (m3/h): 920
Intensive speed exhaust capacity (m3/h): 782
Max speed exhaust capacity (m3/h): 629
Min speed exhaust capacity (m3/h): 331
Intensive speed sound level (dBA): 69
Max speed sound level (dBA): 66
Min speed sound level (dBA): 54
4 LED lamps
3 aluminium filters
Stop delay timer
Filter saturation indicator
Operating pilot light
Anti-return valve included
Outlet reduction included
Optional recirculation kit with tube cover installation: SET 1/T1
Optional Charcoal Filter: D4C

DIMENSIONS

Product height (mm): 817 - 1117
Product width (mm): 1100
Product depth (mm): 605
Product length (mm):
Net weight (Kg): 21,25

TECHNICAL DETAILS

Energy Efficiency Class: 0
Noise (LwA) Min Speed (dB): 0
Noise (LwA) Max Speed (dB): 0
Noise (LwA) Boost Speed (dB): 0
Ø Outlet (mm): 150

COLOURS

40483173 Stainless Steel

40483172 Stainless Steel