Diamond RS15 1B 1D 86 AUTO

Inset glass sink with one bowl and one drainer



Lifetime warranty+SilentSmart

200mm

Hygiene

R15

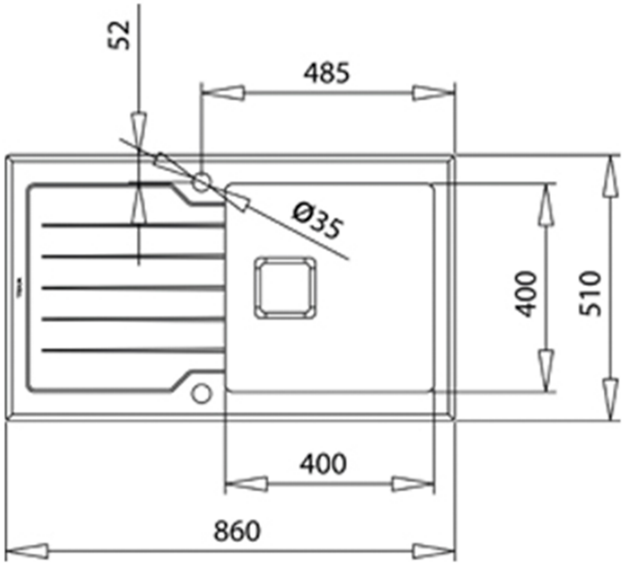

REFERENCE

REF: 115100011 **EAN:** 8434778004731

FEATURES

Diamond Series
Stainless steel and glass sink
One inox bowl and one drainer
Safety tempered glass with bevelled edges
Inset installation
Easy clean radius R15 corners
3½" SQ automatic basket waste with siphon
Decorative SQ cover
SilentSmart, 50% less noise
200 mm deep bowl
50 cm base unit

DIMENSIONS

Product height (mm):
Product width (mm): 510
Product depth (mm): 200
Product length (mm): 860
Net weight (Kg): 3,48

COLOURS

	115100011	Black glass
	115100012	White Glass