HLB 8600 WH

A+ Multifunction Oven with 20 recipes





70L HydroClean SoftClose SurroundTemp

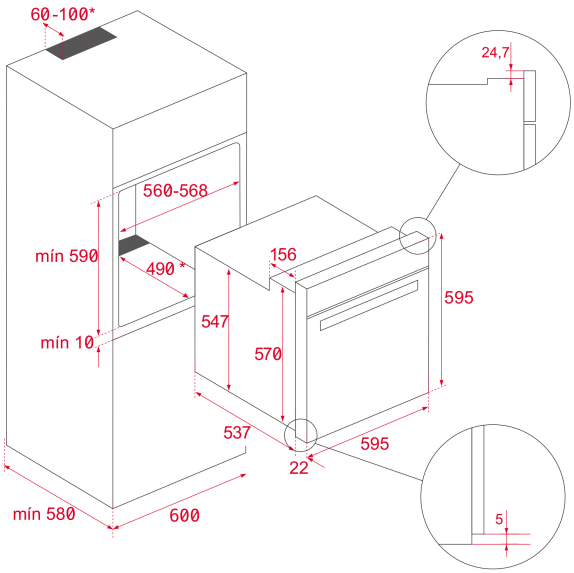

REFERENCE

REF: 111000072 **EAN:** 8434778025378

FEATURES

Urban Colors Edition
Multifunction SurroundTemp oven
12 cooking functions
Automatic HydroClean system
Touch control display with knobs
Personal cooking assistant: 20 automatic programs
Chrome supports with 5 cooking levels
Easy slide telescopic guides
Removable triple glazed door
Automatic disconnection security system
SoftClose system
Children safety lock
Automatic quick preheating
Anti-tip deep tray and reinforced grid
Capacity (gross/net): 71 / 70 litres

DIMENSIONS

Product height (mm): 595
Product width (mm): 595
Product depth (mm): 537+22
Product length (mm):
Net weight (Kg): 32

TECHNICAL DETAILS

Energy Efficiency Class: A+
Power rate (V): 220/240
Frequency (Hz): 50/60
Maximum Nominal Power (W): 3215

COLOURS

111000072 White