GFL 77651 EOS BK

Built-in Filter Group with Rim extraction and electronic control





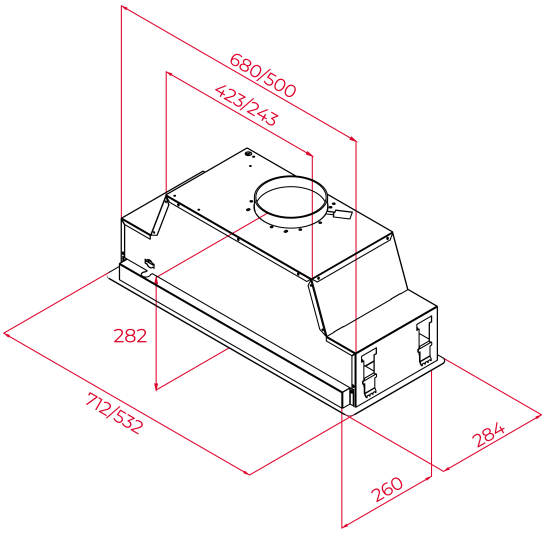

REFERENCE

REF: 113100006 **EAN:** 8434778022346

FEATURES

Built-in hood
Rim extraction
Electronic control
3 speeds + 1 intensive
Free Outlet exhaust capacity (m3/h): 735
Max speed exhaust capacity (m3/h): 738
Intensive speed sound level (dBA): 70,1
Max speed sound level (dBA): 68
Min speed sound level (dBA): 54,4
2 LED Lamps
1 aluminium filter
Stop delay time
Anti-return valve included
Outlet reduction included
Optional Charcoal Filter: D4C

DIMENSIONS

Product height (mm): 282
Product width (mm): 712
Product depth (mm): 284
Product length (mm):
Net weight (Kg): 11.7

TECHNICAL DETAILS

Energy Efficiency Class: A+
Noise (LwA) Min Speed (dB): 54
Noise (LwA) Max Speed (dB): 68
Noise (LwA) Boost Speed (dB): 70
Ø Outlet (mm): 150

COLOURS

113100006 Stainless Steel/Black Glass