MaestroPizza HLB 8510 P

MaestroPizza pyrolytic oven with special pizza function 340ºC



HydroClean

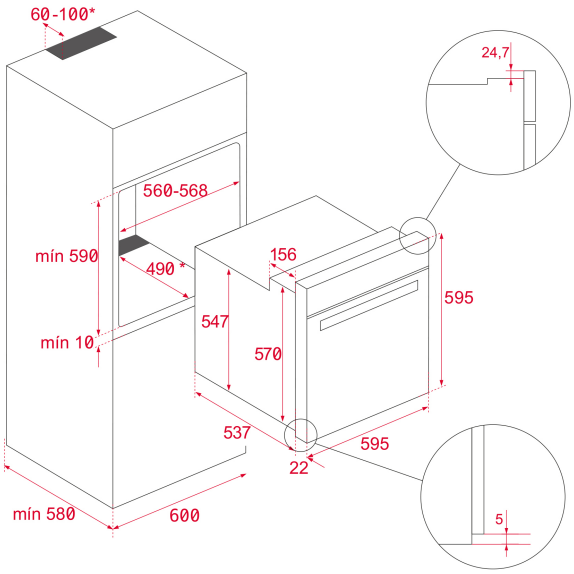

REFERENCE

REF: 111000049 **EAN:** 8434778018363

FEATURES

MaestroPizza oven
Urban Colors Edition
Multifunction SurroundTemp oven
8 cooking functions
Up to 340ºC in cavity for perfect pizza finish
Pyrolysis self-cleaning system and automatic HydroClean system
Touch control display with knobs
Electronic timer(Delay/Start function)
Chrome supports with 5 cooking levels
Plus Extension Telescopic guides
Removable quadruple glazed door
SoftClose system
Automatic disconnection security system
Children safety lock
Manual quick heating
Anti-tip deep tray, baking tray and reinforced grild
Special pizza stone included
Capacity (gross/net): 71 / 70 litres

DIMENSIONS

Product height (mm): 595
Product width (mm): 595
Product depth (mm): 537+22
Product length (mm):
Net weight (Kg): 34

TECHNICAL DETAILS

Energy Efficiency Class: A+
Power rate (V): 220/240
Frequency (Hz): 50/60
Maximum Nominal Power (W): 3552

COLOURS

111000049 Black glass