STONE 60 L-TG 1B 1D MG Inset Tegranite Sink with one bowl and one drainer

Colour Intensity | 200mm | Easy_Clean | Food_Safe | Scratch_Proof

DESCRIPTION	Inset Tegranite Sink with one bowl and one drainer
COLOURS	
REFERENCE	REF. 115330000 EAN. 8434778005295

STONE 60 L-TG 1B 1D MG

FEATURES

Tegranite+ sink, One bowl and one drainer
Inset installation, Reversible drainer
High resistance surface to impacts, thermal shocks and high temperatures
Excellent UV resistance against decoloring
Bacteria-free surface very easy to clean, 80% quartz and resins
3½" manual basket waste with overflow and siphon
60 cm base unit
Thickness: 10 mm bowl / 7 mm top
Packaging: Individual carton box

STONE 60 L-TG 1B 1D MG

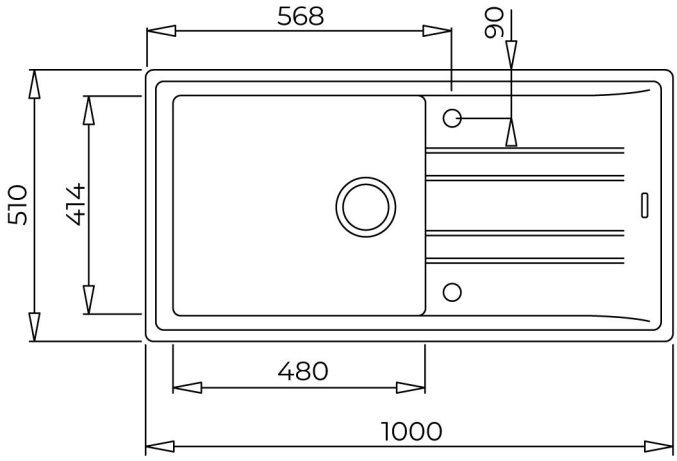

DIMENSIONS

Product height (mm):
Product width (mm): 510
Product depth (mm): 200
Product length (mm): 1000
Net weight (Kg): 13,5

TECHNICAL DETAILS

MAIN BOWL	**Main Bowl Length (mm):** 480 **Main Bowl Width (mm):** 414 **Main Bowl Depth (mm):** 200
OTHER FEATURES	**Material:** Tegranite+ **Type of installation:** Inset **Number of tap holes:** Pre-Drilled **Valve hole type:** 3½"
OTHERS	**Base unit (cm):** 60
SINK LAY OUT	**Number of bowls:** 1 **Number of drainers:** 1 **Drainer position:** Reversible
ACCESSORIES	**Installation clips:** Yes **Siphon:** Yes