Universe 80 T-XP 2B 1D Inset reversible stainless steel sink in 80 cm

Lifetime warranty

Hygiene

DESCRIPTION	Inset reversible stainless steel sink in 80 cm
COLOURS	
REFERENCE	REF. 115170001 EAN. 8434778015133

Universe 80 T-XP 2B 1D

FEATURES

Universe Series
Stainless steel sink, Polished finish
Two bowls and one drainer, reversible
Inset installation
3½" manual basket waste and siphon
170 mm deep bowls
80 cm base unit

Universe 80 T-XP 2B 1D

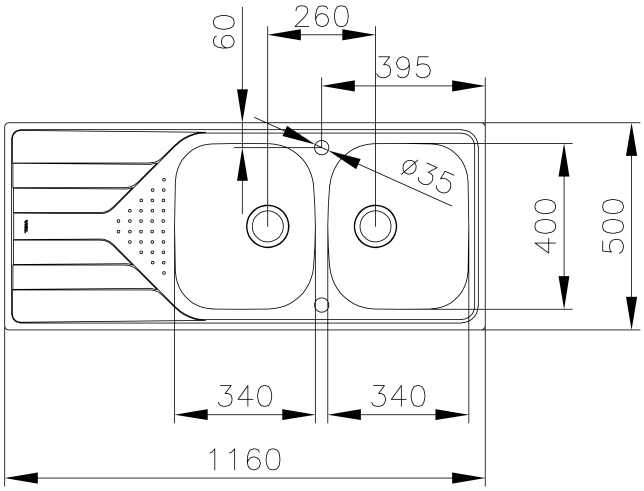

DIMENSIONS

Product height (mm):
Product width (mm): 500
Product depth (mm): 170
Product length (mm): 1160
Net weight (Kg): 4,62

TECHNICAL DETAILS

MAIN BOWL	**Main Bowl Length (mm):** 340 **Main Bowl Width (mm):** 400 **Main Bowl Depth (mm):** 170
OTHER FEATURES	**Material:** Stainless Steel **Type of installation:** Inset **Valve hole type:** 3½" **Overflow hole:** Round
OTHERS	**Base unit (cm):** 80
SECONDARY BOWL	**Secondary Bowl Length (mm):** 340 **Secondary Bowl Width (mm):** 400 **Secondary Bowl Depth (mm):** 170
SINK LAY OUT	**Number of bowls:** 2

Number of drainers: 1
Drainer position: Reversible

ACCESSORIES

Soundproof: Yes
Installation clips: Yes
Siphon: Yes