# **Centroval** Inset Stainless Steel Sink One bowl

Lifetime warranty

Hygiene

| | |
|---|---|
| **DESCRIPTION** | Inset Stainless Steel Sink One bowl |
| **LIFE STYLE** | Easy |
| **COLOURS** | |
| **REFERENCE** | REF. 10111903<br>EAN. 8421152705896 |

# Centroval

**FEATURES**

Stainless steel sink, One bowl
Finish: Polished
Inset Installation
3½" manual basket waste with overflow and siphon
45 cm base unit
Thickness: 0.8mm
Packaging: Individual carton box

TEKA

# Centroval

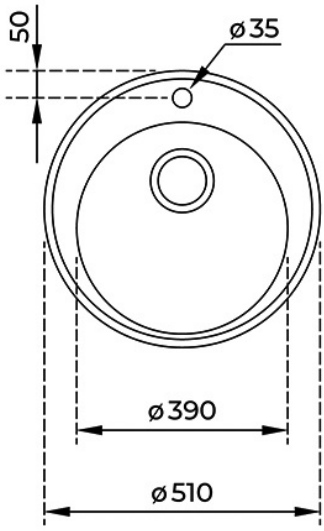


## DIMENSIONS

**Product height (mm):**
**Product width (mm):** Ø510
**Product depth (mm):** 180
**Product length (mm):** Ø510
**Net weight (Kg):** 2,1

## TECHNICAL DETAILS

| | |
|---|---|
| **MAIN BOWL** | **Main Bowl Length (mm):** Ø390<br>**Main Bowl Width (mm):** Ø390<br>**Main Bowl Depth (mm):** 180 |
| **OTHER FEATURES** | **Material:** Stainless Steel<br>**Type of installation:** Inset<br>**Valve hole type:** 3½"<br>**Overflow hole:** Round<br>**Sink Bowl / Top thickness (mm):** 0,8 |
| **OTHERS** | **Base unit (cm):** 45 |
| **SINK LAY OUT** | **Number of bowls:** 1<br>**Number of drainers:** 0 |
| **ACCESSORIES** | **Soundproof:** Yes<br>**Installation clips:** Yes<br>**Siphon:** Yes |