TOTAL **TIKAL DSS 985**

90cm Pyramidal Decorative Hood with electronic controls and ECOPOWER motor

LED

Stop Delay Timer

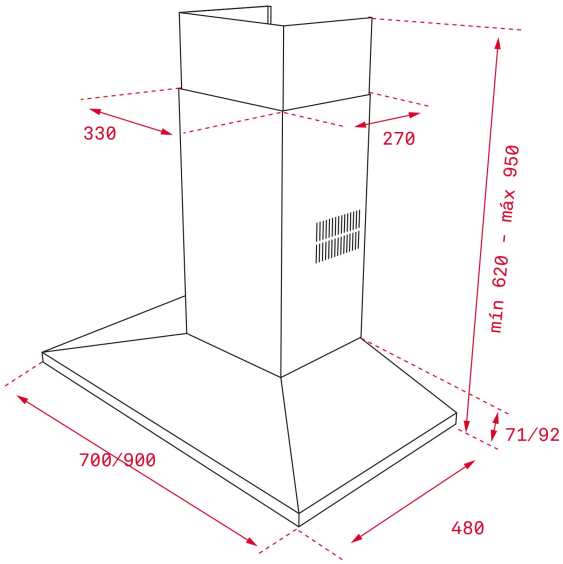

REFERENCE

REF: 40437010 EAN: 8421152145654

FEATURES

Decorative pyramidal hood
Illuminated push buttons control
EcoPower motor
3 speeds + 1 intensive
Free Outlet exhaust capacity (m3/h): 792
Intensive speed exhaust capacity (m3/h): 760
Max speed exhaust capacity (m3/h): 597
Min speed exhaust capacity (m3/h): 303
Intensive speed sound level (dBA): 73
Max speed sound level (dBA): 68
Min speed sound level (dBA): 54
1 LED lamp
3 Stainless Steel filters
Stop delay timer
Operating pilot light
Anti-return valve included
Outlet reduction included

DIMENSIONS

Product height (mm): 700-1100
Product width (mm): 900
Product depth (mm): 480
Product length (mm):
Net weight (Kg): 14,37

TECHNICAL DETAILS

Energy Efficiency Class: A
Noise (LwA) Min Speed (dB): 53,7
Noise (LwA) Max Speed (dB): 68,2
Noise (LwA) Boost Speed (dB): 72,5
Ø Outlet (mm): 150

COLOURS

40437010 Stainless Steel