TOTAL **DH2 ISLA 1285**

120cm A Decorative Island Hood with eletronic panel and ECOPOWER motor

LED

Stop Delay Timer

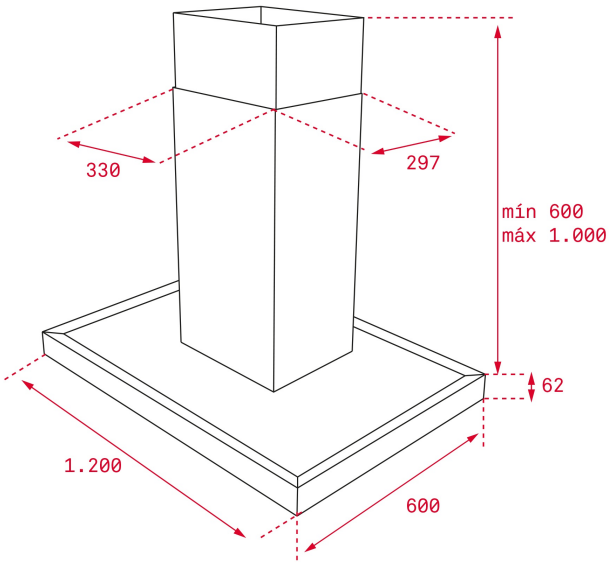

REFERENCE

REF: 40484671 EAN: 8421152145746

FEATURES

Decorative horizontal island hood
Electronic control with display
3 speeds + 1 intensive
Free Outlet exhaust capacity (m3/h): 920
Intensive speed exhaust capacity (m3/h): 796
Max speed exhaust capacity (m3/h): 605
Min speed exhaust capacity (m3/h): 311
Intensive speed sound level (dBA): 71
Max speed sound level (dBA): 66
Min speed sound level (dBA): 52
4 LED lamps
2 Stainless Steel filters
Stop delay timer
Filter saturation indicator
Easy-Clean inside panel
Operating pilot light
Anti-return valve included
Outlet reduction included
Optional recirculation kit with tube cover installation: SET 1/T1
Optional Charcoal Filter: D4C

DIMENSIONS

Product height (mm): 817 / 1117 + 62
Product width (mm): 1200
Product depth (mm): 600
Product length (mm):
Net weight (Kg): 19,2

TECHNICAL DETAILS

Energy Efficiency Class: A
Noise (LwA) Min Speed (dB): 52
Noise (LwA) Max Speed (dB): 66
Noise (LwA) Boost Speed (dB): 71
Ø Outlet (mm): 150

COLOURS

40484671 Stainless Steel

40484670 Stainless Steel