SteakMaster
Multifunction pyrolytic oven with special grill and cast iron grid for steaks

Plus extension guides: 75% extraction | HydroClean steam cleaning system | Pyrolysis cleaning system | SoftClose | SurroundTemp

REFERENCE

REF: 111000036 EAN: 8434778012576

FEATURES

SteakMaster oven
Urban Colors Edition
Multifunction SurroundTemp oven
13 cooking functions
Powerful SteakGrill (700ºC)
Pyrolysis self-cleaning system and automatic HydroClean system
Touch control display with knobs
Electronic timer (Delay/Start function)
20 automatic programs for meat
Chrome supports with 5 cooking levels
Plus Extension Telescopic guides
Removable quadruple glazed door
SoftClose system
Automatic disconnection security system
Children safety lock
Automatic quick preheating
Anti-tip deep tray and reinforced grid
Special cast iron grid for steaks included
Capacity (gross/net): 71 / 63 litres

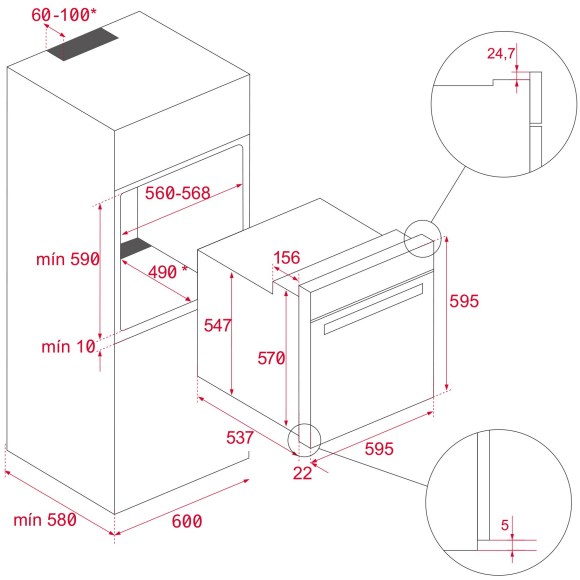

DIMENSIONS

Product height (mm): 595
Product width (mm): 595
Product depth (mm): 537+22
Product length (mm):
Net weight (Kg): 45,8

TECHNICAL DETAILS

Energy Efficiency Class: A
Power rate (V): 220-240
Frequency (Hz): 50/60
Maximum Nominal Power (W): 3518

COLOURS

111000036 Black glass

111000026 Black glass with frame