IBC 64010 M
Urban Colors Edition. Induction hob with MultiSlider touch control and 4 cooking zones

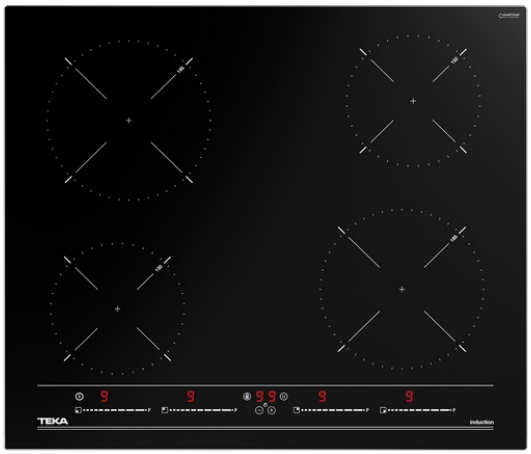

MultiSlider Autolock Power Power Plus Easy installation

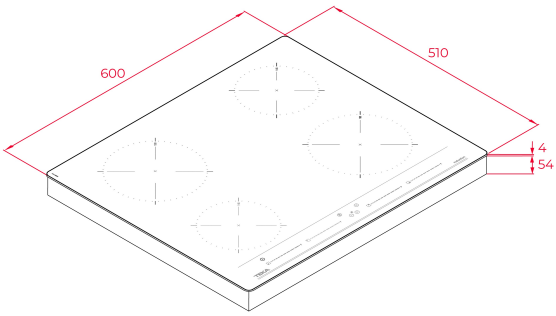

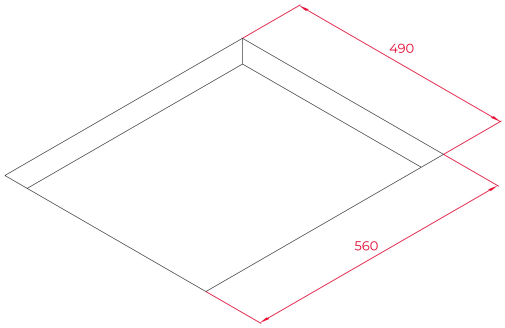

REFERENCE

REF: 112520012 EAN: 8434778011807

FEATURES

Urban Colors Edition
Induction hob
Touch Control MultiSlider
4 cooking zones
2 zones Ø 185 mm
2 zones Ø 150 mm
Ceramic glass surface
Auto-lock safety system
Cooking timer
Power plus
Child lock
Residual heat indicator
Power management
Easy installation kit
Maximum nominal power 7200 W
Optional: Grilling plate
Optional: Teppanyaki

DIMENSIONS

Product height (mm): 58
Product width (mm): 600
Product depth (mm): 510
Product length (mm):
Net weight (Kg): 9,59

TECHNICAL DETAILS

Power rate (V): 220-240
Frequency (Hz): 50/60
Maximum Nominal Power (W): -

COLOURS

112520012 Black glass

ENERGY EFFICIENCY

Power consumption in standby mode (W): 0.3
Time to reach standby mode (min): 1