MAESTRO **AirFry HLB 8416 BK**

Multifunction SurroundTemp oven with special AirFry function

70L | Plus Extension Telescopic Guide | HydroClean | SoftClose | SurroundTemp

REFERENCE

REF: 111000045 EAN: 8434778017427

FEATURES

AirFry oven
Urban Colors Edition
Multifunction SurroundTemp oven
9 cooking functions
Special FryMaster Box to cook without oil
Automatic HydroClean system
Touch control display with knobs
Electronic timer (Delay/Start function)
Chrome supports with 5 cooking levels
Removable triple glazed door
SoftClose system
Children safety lock
Manual quick preheating
Anti-tip deep tray
Capacity (gross/net): 71 / 70 litres

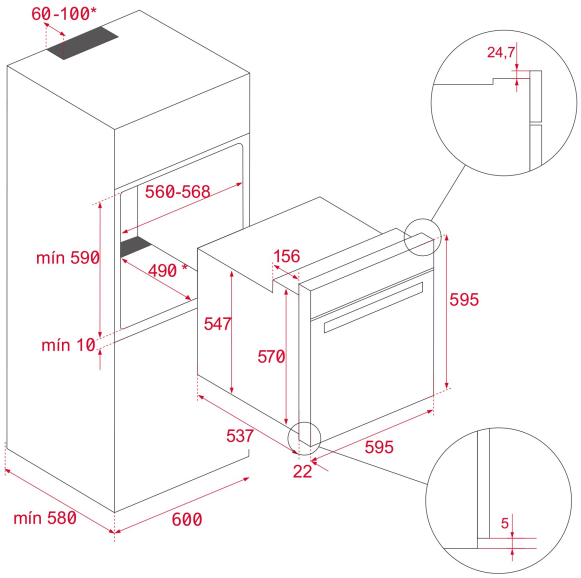

DIMENSIONS

Product height (mm): 595
Product width (mm): 595
Product depth (mm): 537+22
Product length (mm):
Net weight (Kg): 28

TECHNICAL DETAILS

Energy Efficiency Class: A+
Power rate (V): 220-240
Frequency (Hz): 50/60
Maximum Nominal Power (W): 3215

COLOURS

111000045 Black Glass