ML 8220 BIS L WH

Urban Colors Edition. Built-in microwave with grill, ceramic base and left door opening

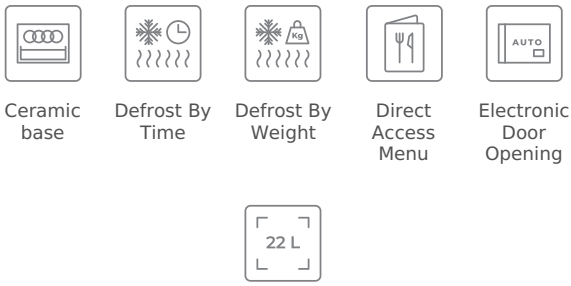

Ceramic base | Defrost By Time | Defrost By Weight | Direct Access Menu | Electronic Door Opening | 22L

REFERENCE

REF: 112030000 EAN: 8434778007671

FEATURES

Urban Colors Edition
Built-in Microwave + Grill
Ceramic base with uniform heating
3 cooking functions
9 direct access menus
5 power levels, 2500 W
Grill power: 1200 W
Defrost by time and weight
Touch control display with knobs
Double glazed door with left opening
Electronic door opening
Automatic disconnection when open door
Incandescent inner light
Dropdown grill
Quick start
Capacity (gross/net): 22 / 21,56 litres
Stainless steel cavity
Crunch plate included
Tangential ventilation

DIMENSIONS

Product height (mm): 390
Product width (mm): 595
Product depth (mm): 334
Product length (mm):
Net weight (Kg): 23,2

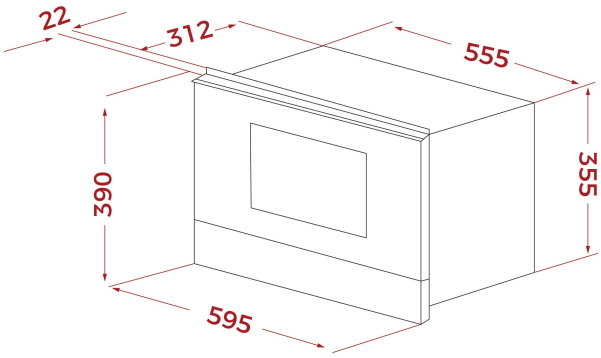

TECHNICAL DETAILS

MWO Power (W): 850
Frequency (Hz): 50
Maximum Nominal Power (W): 2700
Grill (W): 1200

COLOURS

112030000	White glass
112030002	London brick brown glass
112030002	Steam grey glass
112030002	Black glass
112030002	Stone grey glass