DVI 98-G1 EOS BM

Infinity G1 vertical hood. Special edition by Italdesign Giugiaro, 90cm

LED | Perimeter extraction | Stop Delay Timer | Fresh AIR

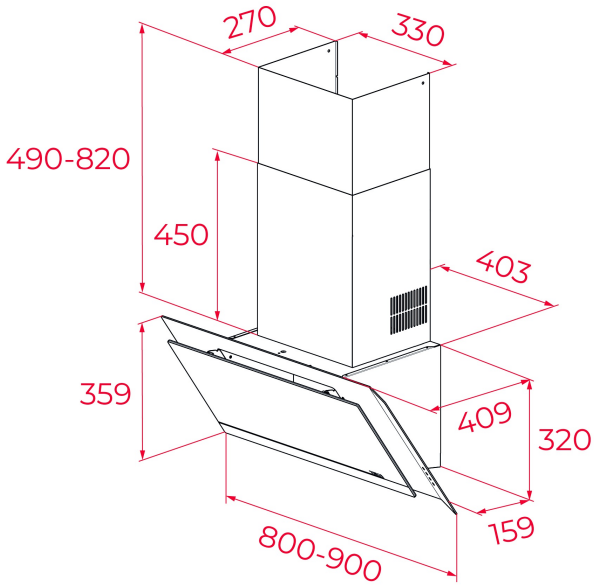

REFERENCE

REF: 112930071 EAN: 8434778031737

FEATURES

Infinity G1 special edition
Designed in Italy by Italdesign Giugiaro
Decorative vertical hood
Exclusive matte black finishing
Electronic soft bottons
FreshAir function
Rim extraction
EcoPower-Double Turbine Motor
3 speeds + 1 intensive
Free Outlet exhaust capacity (m3/h): 738
Max speed exhaust capacity (m3/h): 800
Intensive speed sound level: 71,1 dBA
Max speed sound level: 60 dBA
Min speed sound level: 47,4 dBA
2 LED lamps
2 aluminium filters with 4 layers
Stop delay timer
Anti-return valve included
Optional recirculation kit with tube cover installation: SET 1/N1 RECIRCULACION DPL/DG/DH/NC
Optional regenerative recirculation kit with tube cover installation: RG1 15200 L3C
Optional regenerative recirculation kit without tube cover installation: RG1 15200 O2C
Optional Charcoal Filter: D4C
Optional Regenerative filter: R1RTK

DIMENSIONS

Product height (mm): 810-1140
Product width (mm): 900
Product depth (mm): 409
Product length (mm):
Net weight (Kg): 16,8

TECHNICAL DETAILS

Energy Efficiency Class: A+
Noise (LwA) Min Speed (dB): 47,4
Noise (LwA) Max Speed (dB): 60
Noise (LwA) Boost Speed (dB): 71,1
Ø Outlet (mm): 150

COLOURS

112930071 Black matt