MWR 22 BI Built-in microwave with ceramic base of 22 liters

Defrost By Time

Electronic Door Opening

22L

DESCRIPTION	Built-in microwave with ceramic base of 22 liters
LIFE STYLE	Total
COLOURS	
REFERENCE	REF. 112040000 EAN. 8434778008845

MWR 22 BI

FEATURES

Country Style Edition
Built-in Microwave
Ceramic base with uniform heating
1 cooking function
5 power levels, 1400 W
Defrost by time
Mechanical control knobs
Double glazed door with left opening
Electronic door opening
Automatic disconnection when open door
Incandescent inner light
Capacity (gross/net): 22 / 21,56 litres
Stainless steel cavity
Tangential ventilation

MWR 22 BI

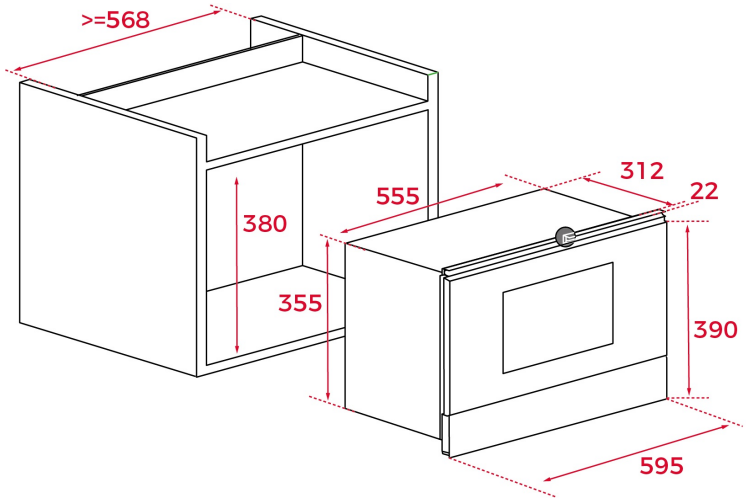

DIMENSIONS

Product height (mm): 380/390
Product width (mm): 595
Product depth (mm): 334
Product length (mm):
Net weight (Kg): 21,6

TECHNICAL DETAILS

FEATURES

Certificates: CE; CB; EAC
Type of inner light: Incandescent
Inside light position: RIGHT
Function selector: MECHANICAL
Number of cooking functions: 1
Knobs type: 2 ROTATING MECHANICAL
Forced refrigeration tangential 1 speed: Yes
Microwave function: Yes
Microwave defrosting: Yes
Number of power levels: 5
Tangential ventilation: Yes

ELECTRIC CONNECTION

Maximum Nominal Power (W): 1400
Frequency (Hz): 50
Power rate (V): 220-240
Cable Connection Length (cm): 150
Plug: Yes
Inside light Consumption (W): 20

ENERGY CONSUMPTION

Cooling Fan Motor (W): 18

SAFETY SYSTEMS

Automatic disconnection when opening the door: Yes
Safety Thermostat: Yes