# **RMF 74810 SS** Free Standing refrigerator with LongLife No Frost with 2 independent circuits and inverter motor

Motor Inverter | On Holidays function | Eco Function | Fresh Box | LED | LongLife No Frost

| | |
|---|---|
| **DESCRIPTION** | Free Standing refrigerator with LongLife No Frost with 2 independent circuits and inverter motor |
| **LIFE STYLE** | Total |
| **COLOURS** | |
| **REFERENCE** | REF. 113430015<br>EAN. 8434778003864 |

# RMF 74810 SS

**FEATURES**

Free Standing bottom freezer refrigerator
LongLife No Frost with 2 independent circuits
Inverter motor
Outer control display
Electronic adjustable thermostat
2 FreshBox drawers
2 safety glass shelves
On holidays function
Fast freezing and fast cooling function
Front adjustable feet
ECO Function
LED Illumination
Climate class: T/ST/N
Total capacity (gross/net): 544 / 493 litres
2 Ice cube trays and twister ice maker included

# RMF 74810 SS

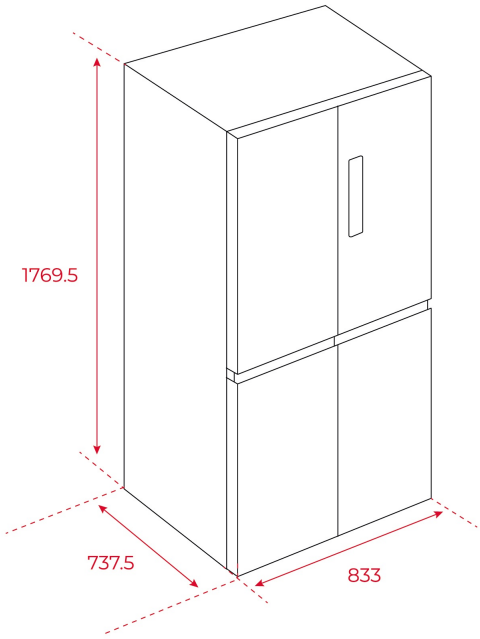


## DIMENSIONS

**Product height (mm):** 1775
**Product width (mm):** 833
**Product depth (mm):** 740
**Product length (mm):**
**Net weight (Kg):** 99

## TECHNICAL DETAILS

### PRODUCT SHEET

**Cooling system:** LongLife No Frost
**No Frost In Refrigerator Compartment:** Yes
**No Frost in chiller:** Yes
**No Frost in freezer compartment:** Yes
**Total gross capacity (litres):** 544
**Refrigerator compartment capacity (litres):** 327
**Chilling Compartment Capacity (litres):** 0
**Freezer compartment capacity (litres):** 156,7
**Freezer classification:** 4
**Freezing capacity:** 18
**Temperature Rise Time (h):** 15
**Climate class:** T、ST、N
**Noise level (dB):** 45
**Certificates:** NOM

### POWER SUPPLY

**Frequency (Hz):** 60
**Power rate (V):** 115
**Defrost element power (W):** 230
**Energy consumption (kw/day):** 1,39
**Plug type:** UL

**Cable Connection Length (cm):** 1700
**Inside light Consumption (W):** 4

## FEATURES

**Type of installation:** Free standing
**Automatic defrosting in the refrigeration compartment:** Yes
**Automatic defrosting in the freezer compartment:** Yes
**Electronic control:** Yes
**Electronic adjustable thermostat:** Yes
**Display on door:** Yes
**Fingerprint proof door:** Yes
**Antibacterial treatment:** NO
**Freezing set button:** Yes
**Cooling set button:** Yes
**Lock function:** Yes
**Fast freezing:** Yes
**Fast Cooling Function:** Yes
**On Holidays Function:** Yes
**ECO function:** Yes
**Inner light:** Yes
**Type of inner light:** LED
**Integrated handle:** Yes

## CONTROL INDICATOR LIGHTS

**Operating light fridge:** Yes
**Operating light freezer:** Yes
**Freezer compartment temperature display:** Yes
**Fast freezing indicator:** Yes
**Acoustic alarm:** Yes

## EQUIPMENT

**Chromed bottle rack:** 0
**Multipurpose compartment:** NO
**Twister ice maker:** Yes
**Ice cubes tray:** 2
**Bottle rack type:** NO
**Adjustable Feet Back:** Yes
**Adjustable feet front:** Yes
**Number of shelves:** 2
**Vegetable drawers:** 2