JZC 96342 ABB Gas + Induction hob with Direct Functions and 6 cooking zones in 90cm of butane gas

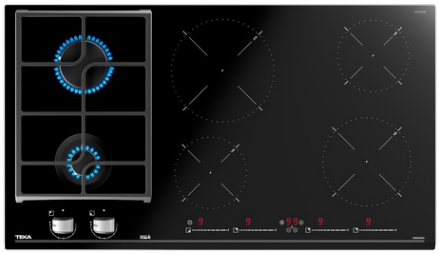

MultiSlider | Auto ignition | Autolock | ExactFlame | Power | Power Plus | Easy installation

DESCRIPTION	Gas + Induction hob with Direct Functions and 6 cooking zones in 90cm of butane gas
LIFE STYLE	Total
COLOURS	
REFERENCE	REF. 112570127 EAN. 8434778011388

JZC 96342 ABB

FEATURES

Urban Colors Edition
Hybrid Series
Gas on glass + Induction hob
ExactFlame
Direct functions: Simmering, melting and keep warm
Frontal control knobs + Touch Control MultiSlider
6 cooking zones
1 fast burner, 2,8 kW
1 semi fast burner, 1.7 kW
1 semi fast burner, 1.4 kW
1 auxiliary burner, 1 kW
1 zone Ø 180 mm
1 zone Ø 145 mm
Ceramic glass surface
Auto ignition
Auto-lock safety system
Cast iron grids
Indution:
Cooking timer
Power plus
Child lock
Residual heat indicator
Power management
Easy installation kit
Maximum nominal power(Gas) 3500 W
Maximum nominal power(Induccion) 6950 W
Silver knobs accessory available

JZC 96342 ABB

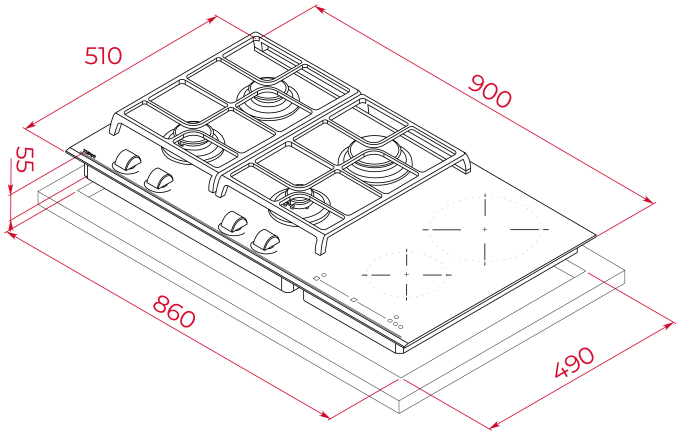

DIMENSIONS

Product height (mm): 98
Product width (mm): 900
Product depth (mm): 510
Product length (mm):
Net weight (Kg): 17,9

TECHNICAL DETAILS

FITTING MEASURES

Built-in Width (mm): 860
Built-in Depth (mm): 490
Built-in height (mm): 49

FEATURES

Gas type: Butane
Maximum nominal power (W) (Gas): 6950
Autoignition: Yes
Number of electric power levels: 9
Simmering: Yes
Melting: Yes
Keeping warm: Yes
Power management function: Yes

ELECTRIC CONNECTION

Maximum Nominal Power (W): 3500
Cable Connection Length (cm): 110
Maximum Nominal Power (W) (Electric hob): 3500

COOKING ZONES	**Cooking Zones:** 6 **Energy consumption for the whole hob, Wh/Kg:** 180,4
SAFETY SYSTEMS	**Automatic safety disconnection (Auto Lock) (Gas):** Yes **Residual heat indicator (Electric hob):** Yes **Automatic safety disconnection (Auto Lock) (Electric hob):** Yes **Child lock:** Yes
FINISH	**Surface finishing:** Front bevelled glass **Surface type:** Ceramic Glass (4mm) **Easy installation system:** Yes
ACCESSORIES	**Grid type:** Full Grid **Wok support:** NO **Junction Kit:** Optional **Cast Iron Grids:** Yes **Teppan Yaki:** No