ARK 938 Single Lever Kitchen Tap with pull-out shower

Anti-Scale Aerator

Pull Out Shower

Resistance

Swivel Spout

DESCRIPTION	Single Lever Kitchen Tap with pull-out shower
LIFE STYLE	Maestro
COLOURS	
REFERENCE	REF. 23938120W EAN. 8421152134252

ARK 938

FEATURES

High spout pull-out kitchen tap
Swivel spout
Anti-scale aerator
Pull-out 1 function: normal
Extra resistant flexible hose
Cartridge with ceramic discs of high resistance
Highly precise temperature control
Greater handling sensitivity with smoother movements
3/8" flexible inlet pipes

ARK 938

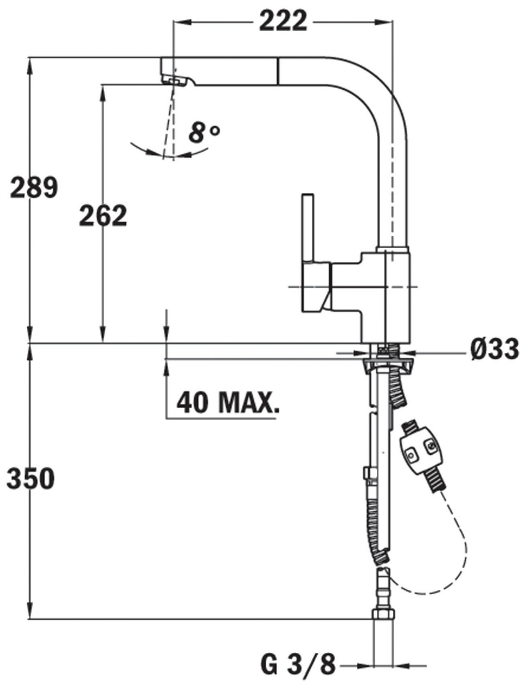

DIMENSIONS

Product height (mm): 289
Product width (mm):
Product depth (mm):
Product length (mm):
Net weight (Kg): 2,7

TECHNICAL DETAILS

MODELS	**Type of installation:** Free standing