ARK 999 Professional Kitchen Mixer with spout to fill recipients

Anti-Scale Aerator

High Resistance

Pull Down Shower

Swivel Spout

DESCRIPTION	Professional Kitchen Mixer with spout to fill recipients
LIFE STYLE	Maestro
COLOURS	
REFERENCE	REF. 239991200 EAN. 8421152112724

ARK 999

FEATURES

Professional kitchen tap
Swivel and flexible spout
Anti-scale aerator
Pull-down shower with stop function. 1 function: Shower spray
Extra spout to fill recipients
High resistant flexible spring
Stainless steel flexible hose reinforced with plastic for better protection and easy cleaning
Cartridge with ceramic discs of high resistance
Highly precise temperature control
Greater handling sensitivity with smoother movements
3/8" flexible inlet pipes

ARK 999

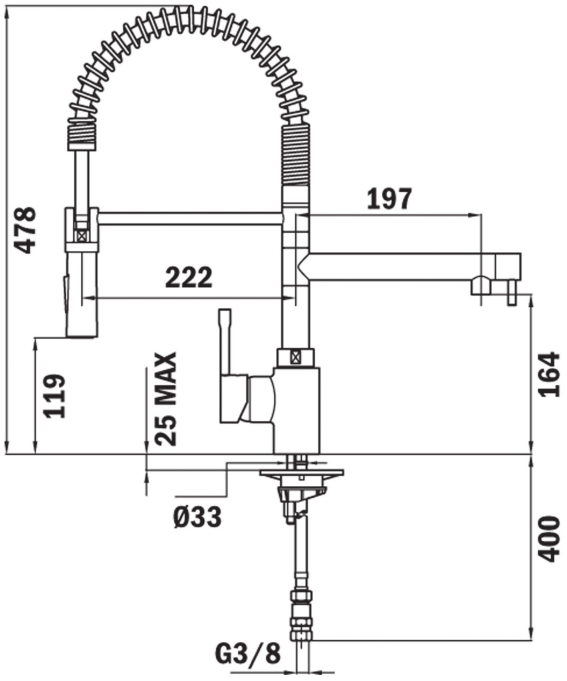

DIMENSIONS

Product height (mm): 478
Product width (mm):
Product depth (mm):
Product length (mm):
Net weight (Kg): 3,55

TECHNICAL DETAILS

MODELS	**Type of installation:** Free standing