OPERA ICO 915 Metallic Edition single lever tap with revolutionary open spout concept

Fingerprint-Proof | Anti-Scale Aerator | Swivel Spout | PVD

DESCRIPTION	Metallic Edition single lever tap with revolutionary open spout concept
LIFE STYLE	Maestro
COLOURS	
REFERENCE	REF. 116030031 EAN. 8434778009231

OPERA ICO 915

FEATURES

Metallic Edition, Titanium Collection
High spout kitchen tap
Revolutionary open spout concept
Swivel Spout
Five anti-scale aerators
3/8" - 1/2" flexible inlet pipes

OPERA ICO 915

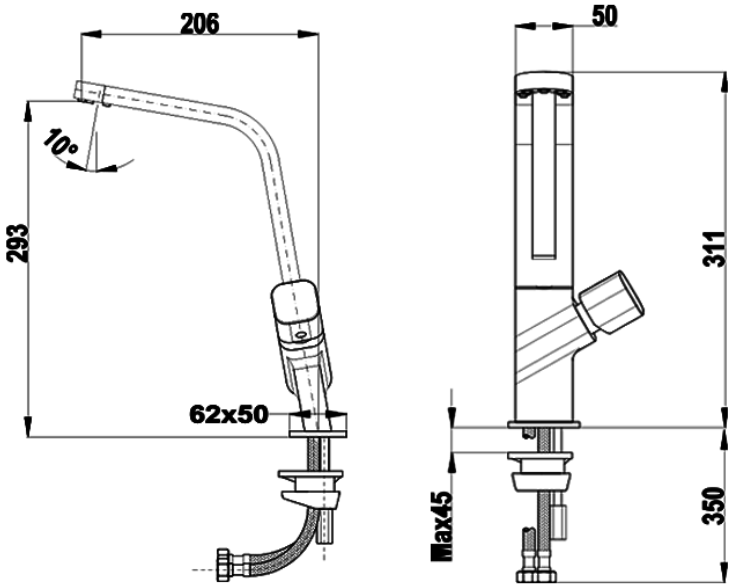

DIMENSIONS

Product height (mm): 311
Product width (mm):
Product depth (mm):
Product length (mm):
Net weight (Kg): 1,92

TECHNICAL DETAILS

MODELS	**Type of installation:** Free standing