# HLB 840 P

60cm 8 Function Pyrolytic Oven with Hydroclean®




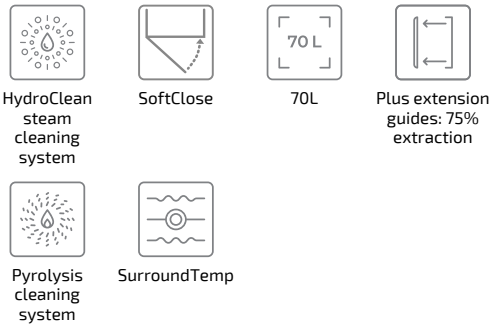


## REFERENCE

**REF:** 41566010 **EAN:** 8421152148808

## FEATURES

Multifunction SurroundTemp – 8 Cooking functions
DualClean cleaning system: Pyrolytic self-cleaning (3 levels) + Teka HydroClean® PRO
A+ Energy class: up to 20% less consumption
Capacity, gross/net: 71/70 litres
Touch Control with electronic timer
Quick heating
Children safety block
Automatic disconnection security system
Quadruple glazed door
SoftClose system
1 Plus-Extension telescopic guide, 5 cooking levels
Anti deep tray and reinforced grid
Tangential ventilation with 2 speeds

## DIMENSIONS

**Product height (mm):** 595
**Product width (mm):** 595
**Product depth (mm):** 537+22
**Product length (mm):**
**Net weight (Kg):** 34

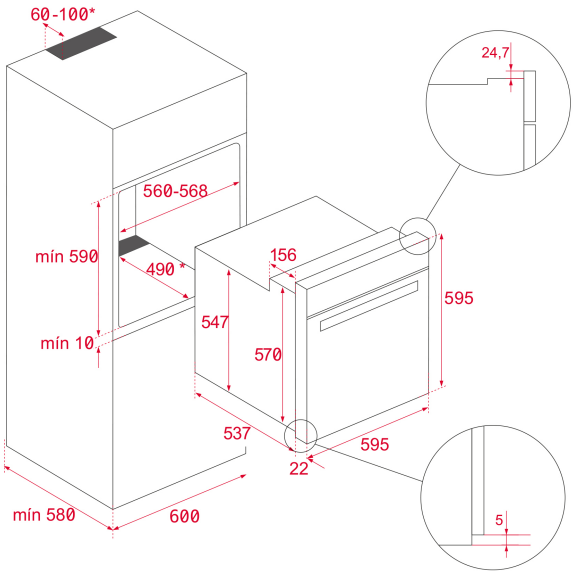


## TECHNICAL DETAILS

Energy Efficiency Class: A+
Power rate (V): 220-240
Frequency (Hz): 50/60
Maximum Nominal Power (W): 3552

## COLOURS

41566010 Black Glass with StainlessSteel frame