MaestroPizza HLB 8510 P BK
60cm 8 Function Dual Cleaning MaestroPizza Oven, Night River Black

HydroClean steam cleaning system | SoftClose | 70L | Plus extension guides: 75% extraction | Pyrolysis cleaning system

SurroundTemp

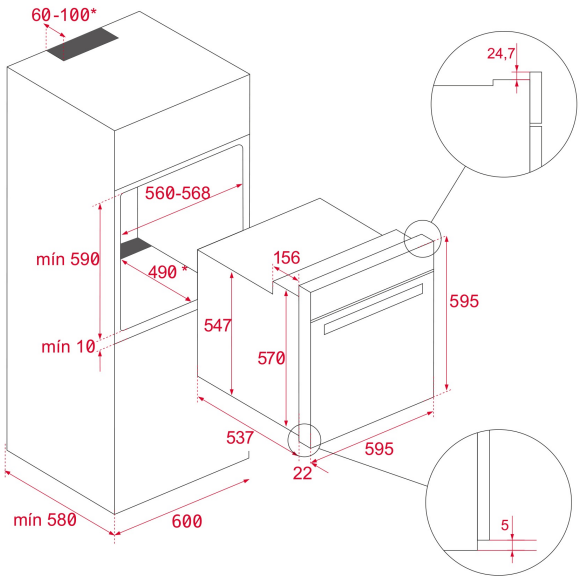

REFERENCE

REF: 111000046 EAN: 8434778017489

FEATURES

MaestroPizza Oven
340ºC extra powerful grill
Includes Pizza Stone & Pizza Paddle
Pyrolytic function and HydroClean® PRO cleaning system
Multifunction SurroundTemp – 8 Cooking functions
SoftClose System
Capacity, gross/net: 71/70 litres
A+ Energy class: up to 20% less consumption
Touch Control Programmer
Telescopic Guides Easy Slide
Express preheating function
Quad glazed glass door
Special baking tray for pizza
Anti-tip deep & baking trays and cooking grid
Child lock safety option

DIMENSIONS

Product height (mm): 595
Product width (mm): 595
Product depth (mm): 537+22
Product length (mm):
Net weight (Kg): 34

TECHNICAL DETAILS

Energy Efficiency Class: A+
Power rate (V): 220-240
Frequency (Hz): 50/60
Maximum Nominal Power (W): 3552

COLOURS

111000046 Black glass