INTEGRA 96750 POS IX

Built-in hood with 3 speeds, 90cm

LED

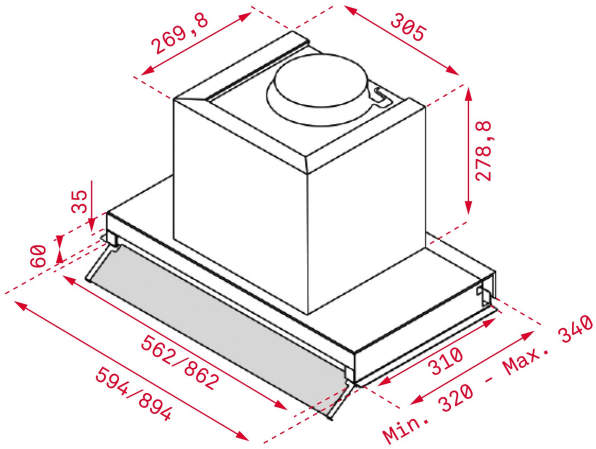

REFERENCE

REF: 113100001 EAN: 8434778014815

FEATURES

Built-in hood
Rotary knob control
3 speeds
Free Outlet exhaust capacity (m3/h): 630
Max speed exhaust capacity (m3/h): 620
Min speed exhaust capacity (m3/h): 255
Max speed sound level (dBA): 70
Min speed sound level (dBA): 50
2 LED Lamps
2 Aluminium filters
Anti-return valve included
Outlet reduction included
Optional Charcoal Filter: D9C

DIMENSIONS

Product height (mm): 339
Product width (mm): 894
Product depth (mm): 310
Product length (mm):
Net weight (Kg): 9,5

TECHNICAL DETAILS

Energy Efficiency Class: A
Noise (LwA) Min Speed (dB): 50
Noise (LwA) Max Speed (dB): 70
Noise (LwA) Boost Speed (dB): NA
Ø Outlet (mm): 150

COLOURS

113100001 Stainless steel