RLF 74917 GBK
Total No Frost Side by Side refrigerator with inverter motor and glass door

Motor Inverter | On Holidays function | Easy 90 | LED

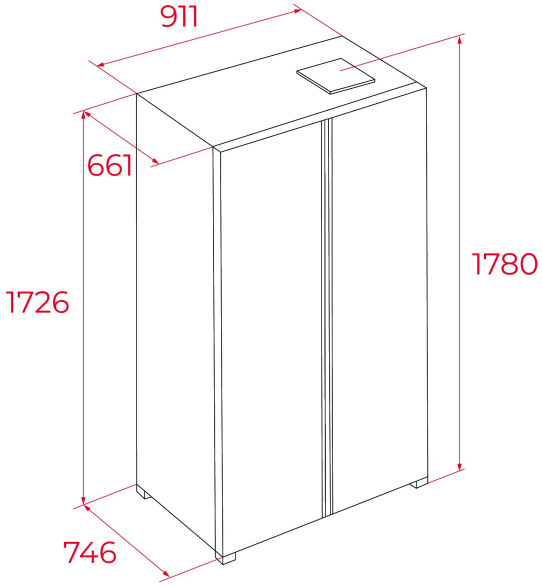

REFERENCE

REF: 113430081 EAN: 8434778031232

FEATURES

Free standing side by side refrigerator
Full No frost
Outer control display
Electronic adjustable thermostat
Capacity: 8 bottles
2 FreshBox drawers
4 safety glass shelves with mettalic finishing
On holidays function
Metal Cooling
Integrated handle
Acoustic alarm
Front adjustable feet
Fast freezing and fast cooling function
Freezer inner shelves
LED illumination
Easy 90º
Climate class: SN/N/ST/T
Total capacity: 627 litres
Twister ice maker and ice cube tray included

DIMENSIONS

Product height (mm): 1780
Product width (mm): 911
Product depth (mm): 746
Product length (mm):
Net weight (Kg): 95

TECHNICAL DETAILS

Energy efficiency class (UE 2019/2016): E
Climate Class: SN/N/ST/T
Energy Consumption (Kw/day): 0.550
Annual Consumption (kWh/year): 334
Freezing Capacity: 14
Noise Level (dBA): 41
Power rate (V): 220-240V
Frequency (Hz): 50HZ

COLOURS

113430081 Black glass