HLB 8600 ST

Urban Colors Edition. Multifunction oven with 20 recipes, 12 cooking functions and HydroClean system

70L | Plus extension guides: 75% extraction | HydroClean steam cleaning system | SoftClose | SurroundTemp

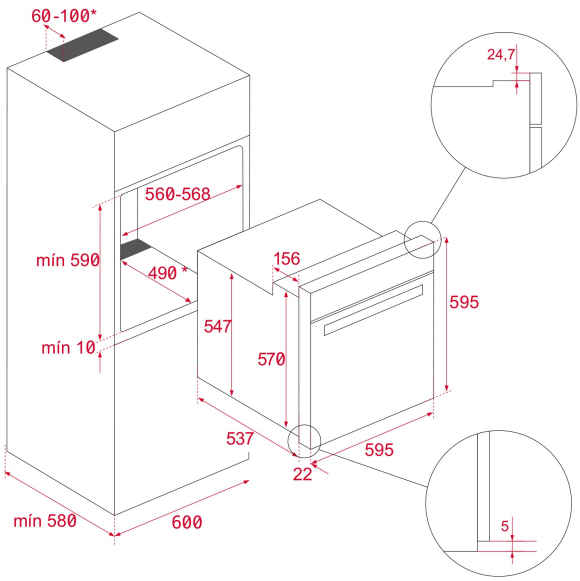

REFERENCE

REF: 111000011 EAN: 8434778008272

FEATURES

Urban Colors Edition
Multifunction SurroundTemp oven
12 cooking functions
Automatic HydroClean system
Touch control display with knobs
Electronic timer (Delay/Start function)
Personal cooking assistant: 20 automatic programs
Chrome supports with 5 cooking levels
Easy slide telescopic guides
Removable triple glazed door
SoftClose system
Automatic disconnection safety system
Children safety lock
Automatic quick preheating
Anti-tip deep tray and reinforced grid
Capacity (gross/net): 71 / 70 litres

DIMENSIONS

Product height (mm): 595
Product width (mm): 595
Product depth (mm): 537+22
Product length (mm):
Net weight (Kg): 32

TECHNICAL DETAILS

Energy Efficiency Class: A+
Power rate (V): 220-240
Frequency (Hz): 50/60
Maximum Nominal Power (W): 3215

COLOURS

111000011	Stone grey glass
111000012	London brick brown glass
111000012	Black glass
111000012	Steam grey glass
111000012	White glass