NEO HSC 6350 SS

Multifunction compact oven with 8 cooking functions and HydroClean system

44L

HydroClean steam cleaning system

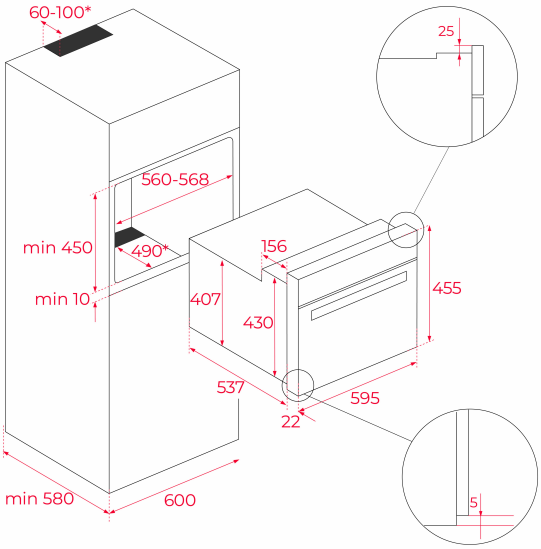

REFERENCE

REF: 111140003 EAN: 8434778034226

FEATURES

Neo Series
Multifunction oven
ThermoSeal System for a stable temperature inside
Ultra-resistant BrightClean enamel
FastClick System for tray supports
Ergonomic and stylish handle
Wider LED display window
8 cooking functions
Automatic HydroClean system
Touch control display with knobs
Electronic timer (Delay/Start function)
Chrome supports with 3 cooking levels
Plus Extension Telescopic guides
Removable triple glazed door
Automatic disconnection security system
Manual quick preheating
Grill protection
Drop-down grill
Door square pattern
Flat Stainless-Steel panel
Anti-tip deep tray
Fingerprint proof stainless steel
Capacity (gross/net): 45 / 44 litres

DIMENSIONS

Product height (mm): 455
Product width (mm): 595
Product depth (mm): 537+22
Product length (mm):
Net weight (Kg): 25

TECHNICAL DETAILS

Energy Efficiency Class: A+
Power rate (V): 220/240
Frequency (Hz): 50/60
Maximum Nominal Power (W): 2615

COLOURS

111140003 Stainless steel