TG1 80 EU Free Standing Tabletop Larder freezer of 84.5 cm with 1 door and 3 separate compartments

DESCRIPTION	Free Standing Tabletop Larder freezer of 84.5 cm with 1 door and 3 separate compartments
LIFE STYLE	Easy
COLOURS	
REFERENCE	REF. 40670410 EAN. 8421152134030

TG1 80 EU

FEATURES

Free Standing table top freezer
Manual defrost
Manual adjustable thermostat
Front adjustable feet
Reversible doors
Climate class: N/ST
Total capacity (gross/net): 94 / 84 litres
Ice cube tray included

TG1 80 EU

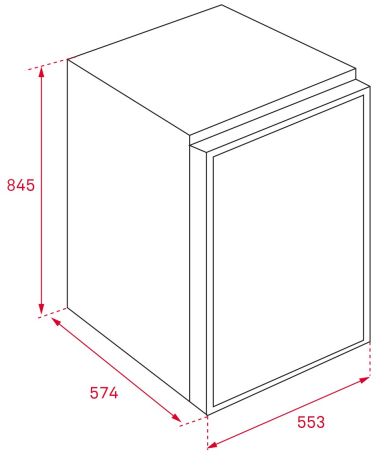

DIMENSIONS

Product height (mm): 845
Product width (mm): 553
Product depth (mm): 574
Product length (mm):
Net weight (Kg): 29

TECHNICAL DETAILS

PRODUCT SHEET

Cooling system: Defrost
Total gross capacity (litres): 94
Freezer compartment capacity (litres): 84
Freezer classification: 4
Freezing capacity: 6
Annual Consumption (kWh/year): 205
Temperature Rise Time (h): 20
Climate class: ST/N
Noise level (dB): 39
Certificates: CE, Intertek

POWER SUPPLY

Frequency (Hz): 50
Power rate (V): 220-240
Power rate (W): 70
Energy consumption (kw/day): 0,48

FEATURES

Type of installation: Free standing
Antibacterial treatment: NO
Reversible doors: Yes

	Integrated handle: Yes
EQUIPMENT	**Multipurpose compartment:** NO **Adjustable Feet Back:** Yes **Adjustable feet front:** Yes

TG1 80 EU
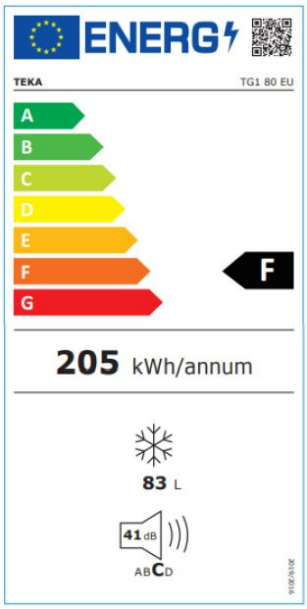
ENERGY LABEL