DFS 74850 SS 45 cm free standing dishwasher PremiumCare Series with 10 place settings and third tray MultiFlex3

Eco Function | Third Cutlery Tray | Extra Dry function | IonClean | AutoDoor opening system | Water dirtiness sensor Aqualogic

DESCRIPTION	45 cm free standing dishwasher PremiumCare Series with 10 place settings and third tray MultiFlex3
LIFE STYLE	Maestro
COLOURS	
REFERENCE	REF. 114300003 EAN. 8434778013948

DFS 74850 SS

FEATURES

PremiumCare series
Free standing Dishwasher
Electronic control panel with display
Capacity: 10 plate settings
Washing programs: 6
Washing temperatures: 50°, 55°, 60°, 65°, 72°C
PremiumDry automatic opening system
MultiFlex 3 cutlerly tray
SmartSensor measure the level of dirtiness
FlexiSet 2 lower basket
Special programs: AutoClean, AutoProgram, Intensive program, ECO program, 1-Hour, Whisper program, Hygienic, PreWash
Special functions: Express, PowerWash, ExtraDry, AlternativeWash
AquaStop and AquaSafe safety systems
Low salt and rinse indicator
Third sprayer
Adjustable upper basket
Delay timer: 1-24 hours
Noise level: 44 dBA
Sliding Detergent drawer
Column installation

DFS 74850 SS

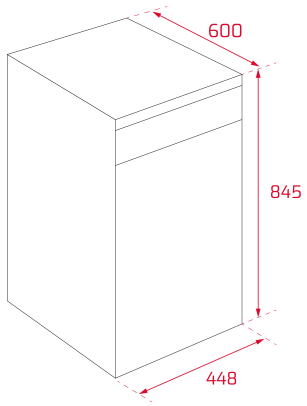

DIMENSIONS

Product height (mm): 845
Product width (mm): 448
Product depth (mm): 600
Product length (mm):
Net weight (Kg): 41,4

TECHNICAL DETAILS

PRODUCT SHEET

Capacity (Place Settings): 10
Energy consumption (kWh/year): 188
Power consumption (Kwh): 0,658
Water consumption (litres/year): 2240
Water consumption (litres): 8
Standard program: ECO
Standard cycle duration (minutes): 198
Noise level (dB): 44
Certificates: GS;CE;EMC;LVD;CB

POWER SUPPLY

Frequency (Hz): 50
Power rate (V): 220
Plug type: EU
Cable Connection Length (cm): 150
Maximum Nominal Power (W): 2100
Power of heating element (W): 1800
Water outlet hose length (m): 1.38
Water inlet hose length (m): 1.5

FEATURES	**Type of installation:** Free standing **Control panel:** Electronic buttons **Control panel display:** Yes **Number of programs:** 8 **Number Of Washing Temperatures:** 6 **Anti-bacterial filter:** Yes **Ion Clean (Anti-smell bacteria):** Yes **Aqua-Logic:** Yes **Water softener:** Yes **Microfilter:** Yes **Installation in column:** Yes
SAFETY SYSTEMS	**Internal Leakage Control:** Yes **Aquastop:** Yes **Child lock:** Yes
CONTROL INDICATOR LIGHTS	**Low Salt Aid indicator:** Yes **Low Rinse Aid indicator:** Yes **Selected program indicator:** Yes **Remaining time:** Yes **Auto door opening indicator:** Yes **End of program acoustic alarm:** Yes **End of program visual alarm:** Yes
SPECIAL FUNCTIONS	**Soak/Prewash program:** Yes **1 Hour program:** Yes **Economic program:** Yes **Intense program:** Yes **Alternative wash (Zone Wash):** Yes **Delayed Timer (h):** 1-24 HOURS
EQUIPMENT	**3rd Basket:** Yes **3rd sprayer:** Yes

DFS 74850 SS
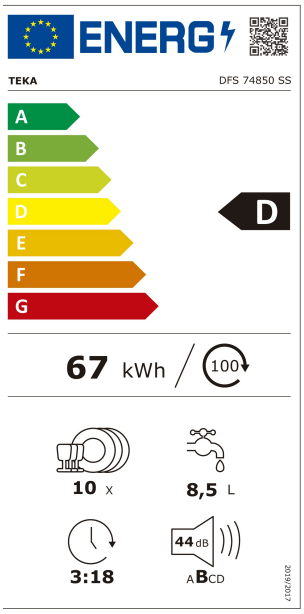
ENERGY LABEL