CLC 855 GM BK-SS Built-in coffee machine with automatic programs for ground coffee, tea and steam

Coffee beans | Ground coffee

DESCRIPTION	Built-in coffee machine with automatic programs for ground coffee, tea and steam
LIFE STYLE	Maestro
COLOURS	
REFERENCE	REF. 41598030 EAN. 8421152145401

CLC 855 GM BK-SS

FEATURES

Automatic built-in coffee machine
Self-cleaning function
Intensity and coffee size regulation
Touch control display with knobs
30 automatic programs
Capacity: 2 cups at once
Adjustable height system for different cup sizes
Milk frother and hot water pipe
Integrated steel grinder for natural coffee beans
Coffee beans container, 200 grams capacity
Availability for ground coffee
15 bar pump pressure
1.8 litres water tank
Waste container
Descaling function
Installation with telescopic rails for easy pull out of the coffee maker

CLC 855 GM BK-SS

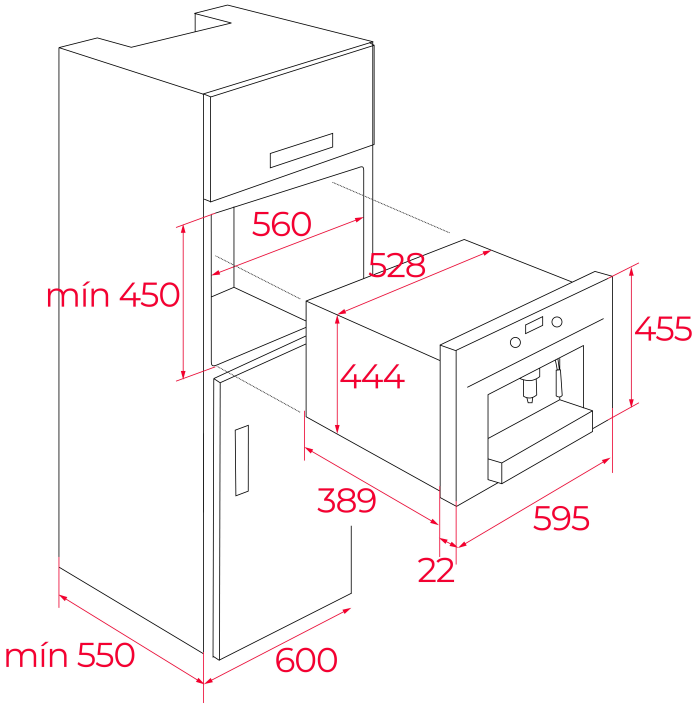

DIMENSIONS

Product height (mm): 455
Product width (mm): 595
Product depth (mm): 412
Product length (mm):
Net weight (Kg): 23

TECHNICAL DETAILS

FITTING MEASURES

Built-in Width (mm): 560
Built-in Depth (mm): 550
Built-in height (mm): 450

FEATURES

Type of installation: Built-in
Certificates: IMQ/CCC
Pump pressure (Bar): 15
Pump power (W): 50
Control panel: Electronic
Fingerprint proof: Yes
Number of programs: 30
Number of cups: 2
Adjustable coffee dispenser: Yes
Retractable pipe for steam and hot water: Yes
Grinded coffee: Yes
On/Off function: Yes
Steamer: Yes
Hot Water: Yes
Clock (option in menu): Yes
Descaling (option in menu): Yes

Coffee temperature (option in menu): Yes
Selected function indicator: Yes
Full water tank indicator: Yes
Ground too fine, adjust mill indicator: Yes
Lack of coffee beans indicator: Yes
Empty coffee drawer indicator: Yes
Insert coffee drawer (missing) indicator: Yes
Generic Alarm: Yes