MAESTRO **DPS 786**

70cm A+ Decorative Hood with Contour Rim extraction and ECOPOWER motor

LED

Stop Delay Timer

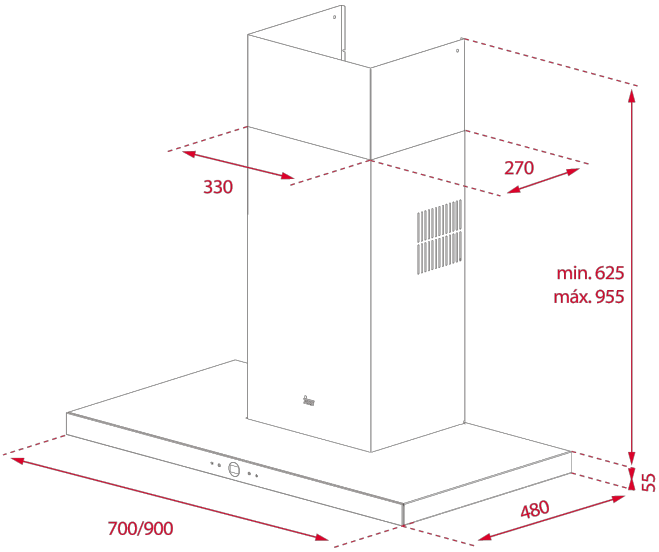

REFERENCE

REF: 40483016 EAN: 8421152157466

FEATURES

Decorative horizontal hood
Electronic control with display
Rim extraction
3 speeds + 1 intensive
Free Outlet exhaust capacity (m3/h): 920
Intensive speed exhaust capacity (m3/h): 782
Max speed exhaust capacity (m3/h): 629
Min speed exhaust capacity (m3/h): 331
Intensive speed sound level (dBA): 65
Max speed sound level (dBA): 55
Min speed sound level (dBA): 45
1 LED lamp
2 Aluminum filters
Stop delay timer
Filer saturation indicator
Operating pilot light
Anti-return valve included
Outlet reduction included
Optional recirculation kit with tube cover installation:SET 1/N1
Optional Charcoal Filter: D4C

DIMENSIONS

Product height (mm): 690-1010
Product width (mm): 900
Product depth (mm): 480
Product length (mm):
Net weight (Kg): 14,02

TECHNICAL DETAILS

Energy Efficiency Class: A+
Noise (LwA) Min Speed (dB): 54
Noise (LwA) Max Speed (dB): 67
Noise (LwA) Boost Speed (dB): 69
Ø Outlet (mm): 150

COLOURS

40483016 Stainless Steel