MAESTRO **HLB 8400 P**

A+ Pyrolytic Multifunction Oven

70L | DualClean | Plus Extension Telescopic Guide | HydroClean | Pyrolysis

SurroundTemp

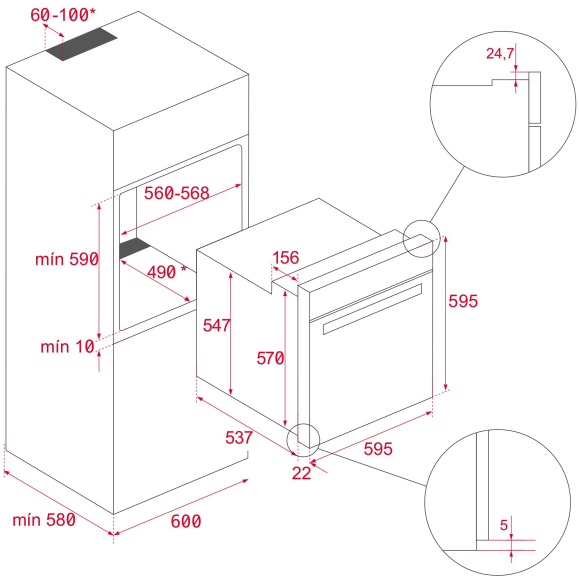

REFERENCE

REF: 111000008 EAN: 8434778007602

FEATURES

Urban Colors Edition
Multifunction SurroundTemp oven
8 cooking functions
Pyrolysis self-cleaning system and automatic HydroClean system
Mechanical control knobs
Electronic timer
Chrome supports with 5 cooking levels
Easy slide telescopic guides
Removable quadruple glazed door
Children safety lock
Automatic disconnection safety system
Manual quick preheating
Anti-tip deep tray
Capacity (gross/net): 71 / 70 litres

DIMENSIONS

Product height (mm): 595
Product width (mm): 595
Product depth (mm): 537+22
Product length (mm):
Net weight (Kg): 34

TECHNICAL DETAILS

Energy Efficiency Class: A+
Power rate (V): 220-240
Frequency (Hz): 50/60
Maximum Nominal Power (W): 3552

COLOURS

111000008	Black Glass
111000009	White Glass
111000009	Stone Grey Glass