DOS 90.1 ATS

Country Style Edition. Wall-mounted hood with 3 speeds, 90cm

LED

REFERENCE

REF: 113010006 EAN: 8434778010107

FEATURES

Country Style Edition
Decorative pyramidal hood
Electronic control
3 speeds
Free Outlet exhaust capacity (m3/h): 650
Max speed exhaust capacity (m3/h): 603
Min speed exhaust capacity (m3/h): 256
Max speed sound level (dBA): 66
Min speed sound level (dBA): 51
2 LED lamps
2 Aluminum filters
Operating pilot light
Anti-return valve included
Outlet reduction included
Optional recirculation kit with tube cover installation: SET 4/D
Optional Charcoal Filter: D5C

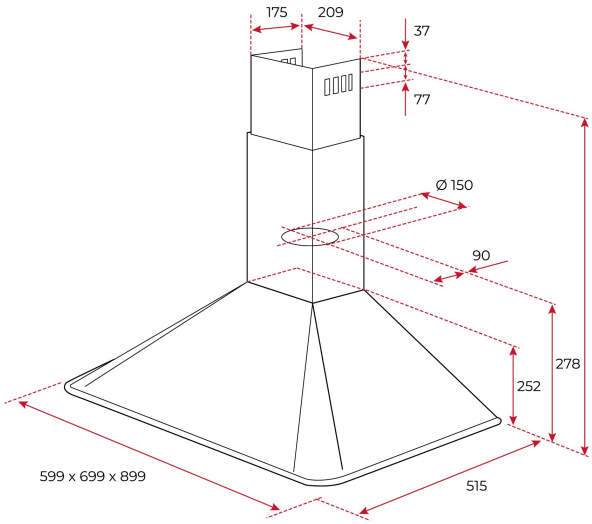

DIMENSIONS

Product height (mm): 733-1148
Product width (mm): 600/900
Product depth (mm): 500
Product length (mm):
Net weight (Kg): 13,2

TECHNICAL DETAILS

Energy Efficiency Class: B
Noise (LwA) Min Speed (dB): 51
Noise (LwA) Max Speed (dB): 66
Noise (LwA) Boost Speed (dB): N/A
Ø Outlet (mm): 150

COLOURS

113010006 Anthracite brass

40489333 Vanilla silver

40489333 Vanilla brass

40489333 Anthracite brass