TOTAL **JZC 95314 AB**

Gas on glass + Induction hob with Direct Functions and 5 cooking zones in 90cm of natural gas

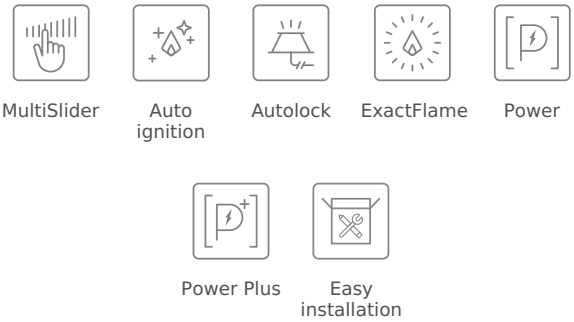

REFERENCE

REF: 112570202 EAN: 8434778019872

FEATURES

Urban Colors Edition
Gas on glass + Induction hob
ExactFlame
Frontal control knobs + Touch Control MultiSlider
5 cooking zones
1 double ring burner, 4.00 kW
1 zone Ø 210 mm
1 zone Ø 180 mm
2 zones Ø 145 mm
Ceramic glass surface
Auto ignition
Auto-lock safety system
Cast iron grids
Indution:
Cooking timer
Power plus
Child lock
Residual heat indicator
Power management
Easy installation kit
Maximum nominal power(Gas) 4000 W
Maximum nominal power(Induction) 7200 W
Optional: Wok support
Silver knobs accessory available

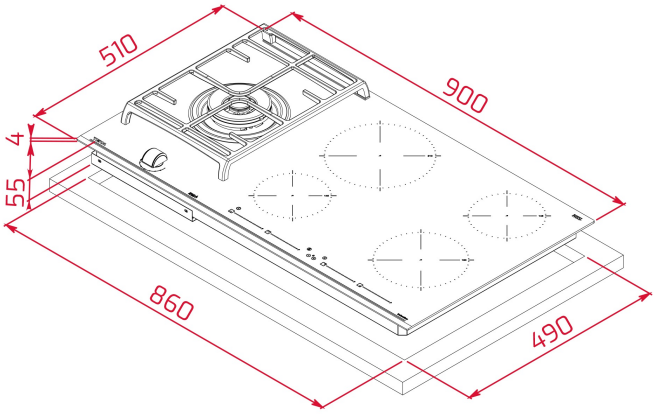

DIMENSIONS

Product height (mm): 98
Product width (mm): 900
Product depth (mm): 510
Product length (mm):
Net weight (Kg): 16,4

TECHNICAL DETAILS

Power rate (V): 220-240
Frequency (Hz): 50/60
Maximum Nominal Power (W): 7200

COLOURS

112570202 Black Glass