CLC 855 GM RX
Urban Colors Edition. Built-in coffee machine with automatic programs for ground coffee, tea and steam

Coffee beans | Ground coffee

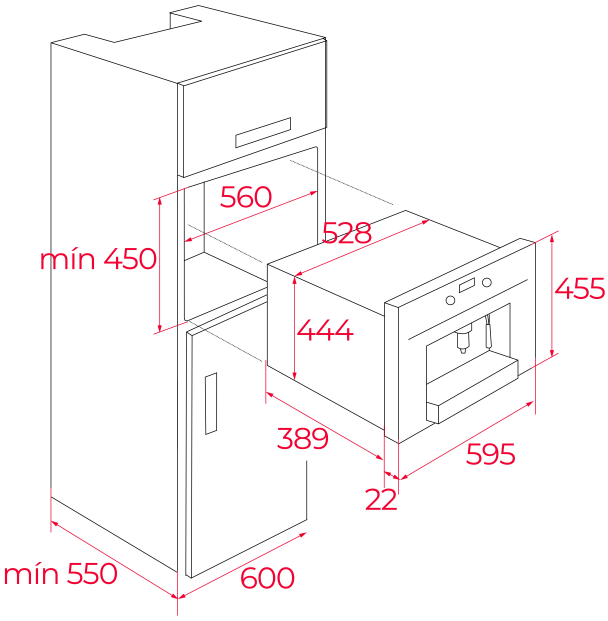

REFERENCE

REF: 111630002 EAN: 8434778004137

FEATURES

Urban Colors Edition
Automatic built-in coffee machine
Self-cleaning function
Intensity and coffee size regulation
Touch control display with knobs
30 automatic programs
Capacity: 2 cups at once
Adjustable height system for different cup sizes
Milk frother and hot water pipe
Integrated steel grinder for natural coffee beans
Coffee beans container, 200 grams capacity
Availability for ground coffee
15 bar pump pressure
1.8 litres water tank
Waste container
Descaling function
Installation with telescopic rails for easy pull out of the coffee maker

DIMENSIONS

Product height (mm): 455
Product width (mm): 595
Product depth (mm): 412
Product length (mm):
Net weight (Kg): 23

TECHNICAL DETAILS

Power rate (V): 220-240
Frequency (Hz): 50/60
Maximum Nominal Power (W): 1350

COLOURS

111630002	Reflex glass
111630001	Black glass with frame
111630001	Black glass
111630001	Stone grey glass
111630001	Steam grey glass