ML 82-G1 BIS L BM

Infinity G1 built-in microwave. Special edition by Italdesign Giugiaro

Defrost By Time | Defrost By Weight | Direct Access Menu | Electronic Door Opening | 22L

REFERENCE

REF: 112030009 EAN: 8434778022445

FEATURES

Infinity G1 special edition
Designed in Italy by Italdesign Giugiaro
Built-in Microwave + Grill
Exclusive matte black finishing
Ceramic base with uniform heating
3 cooking functions
5 power levels, 850 W
Grill power: 1200 W
Defrost by time and weight
Touch control display with knobs and minute minder
Double glazed door with left opening
Electronic door opening
Automatic disconnection when open door
Incandescent inner light
Dropdown grill
Quick start
Capacity (gross/net): 22 /21.56 litres
Stainless steel cavity
Crunch plate included

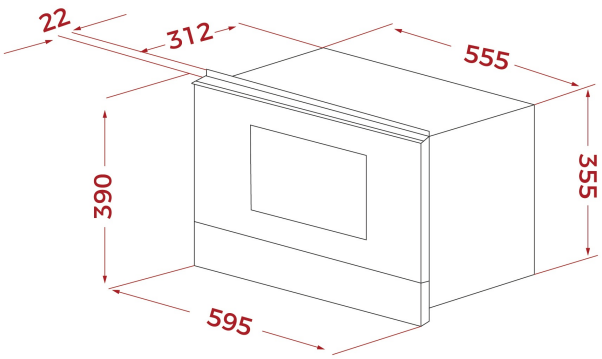

DIMENSIONS

Product height (mm): 390
Product width (mm): 595
Product depth (mm): 334
Product length (mm):
Net weight (Kg): 23,2

TECHNICAL DETAILS

MWO Power (W): 850
Frequency (Hz): 50
Maximum Nominal Power (W): 2700
Grill (W): 1200

COLOURS

112030009 Black matt