CC 485 INOX 40 cm Tubular Island Hood Design with Touch Control and COPOWER motor

LED

Stop Delay Timer

DESCRIPTION	40 cm Tubular Island Hood Design with Touch Control and COPOWER motor
LIFE STYLE	Maestro
COLOURS	
REFERENCE	REF. 40480330 EAN. 8421152145869

CC 485 INOX

FEATURES

Decorative tubular island hood
Electronic control with display
3 speeds + 1 intensive
Free Outlet exhaust capacity (m3/h):920
Intensive speed exhaust capacity (m3/h):771
Max speed exhaust capacity (m3/h):525
Min speed exhaust capacity (m3/h): 305
Intensive speed sound level (dBA): 78
Max speed sound level (dBA): 72
Min speed sound level (dBA): 50
2 LEDS lamps
1 Stainless Steel filter
Stop delay timer
Filter saturation indicator
Operating pilot light
Anti-return valve included
Outlet reduction included
Optional recirculation kit with tube cover installation: SET 1/I1
Optional Charcoal Filter: D4C

CC 485 INOX

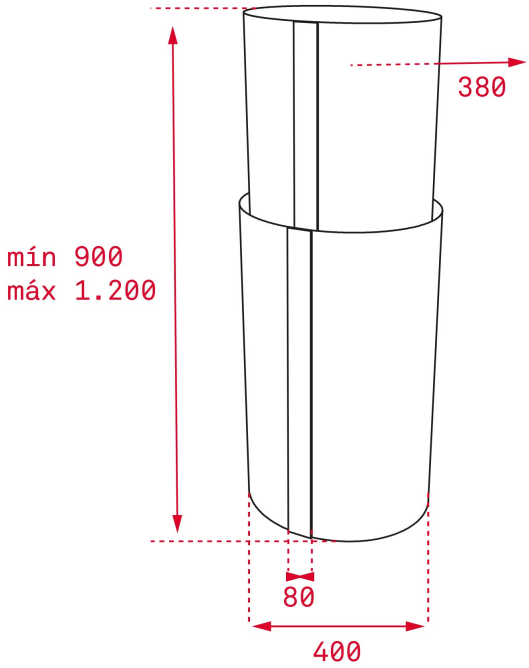

DIMENSIONS

Product height (mm): 900-1200
Product width (mm): 400
Product depth (mm): 400
Product length (mm):
Net weight (Kg): 21,5

TECHNICAL DETAILS

FEATURES

Certificates: CE; CB
Ø Outlet (mm): 150
Type of inner light: LED
Inside light Consumption (W): 3
Plug type: European plug
Power rate (V): 220-240
Frequency (Hz): 50
Total hood power (W): 286
Number of motors: 1
Motor power (W): 280
Air flow (Qmin) m3/h: 305
Air flow (Qmax): 525
Air flow (Qboost): 771

ACCESSORIES

Anti Return valve: Yes
Outlet reduction: Yes
Optional Charcoal Filter: D4C
Conventional recirculation kit (opt) - w/tube cover: SET 1/I1

MODELS	**Number of filters:** 1 **Filter description:** Stainless Steel filters **Control panel:** Touch control White display **Stop delay timer:** Yes **Filter saturation indicator:** Yes **Number of speeds:** 3+1

CC 485 INOX
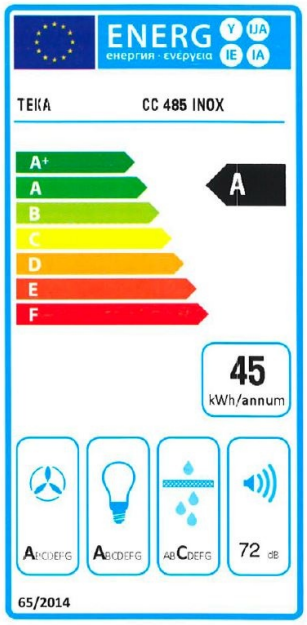
ENERGY LABEL