iOven A+ Multifunction Oven with 50 recipes and SteamBox

70L | Full Extension Telescopic Guide | MeatProbe | HydroClean | SoftClose | SurroundTemp | The SteamBox Included

DESCRIPTION	A+ Multifunction Oven with 50 recipes and SteamBox
LIFE STYLE	Maestro
COLOURS	
REFERENCE	REF. 41560160 EAN. 8421152148976

TEKA

iOven

FEATURES

Multifunction SurroundTemp oven
18 cooking functions
Automatic HydroClean system
Full touch control display
Personal cooking assistant: 50 automatic programs
Chrome supports with 5 cooking levels
Full extension telescopic guides
Easy slide telescopic guides
Removable triple glazed door
SoftClose system
Children safety lock
Automatic disconnection safety system
Automatic quick preheating
Anti-tip deep tray
The SteamBox included
Capacity (gross/net): 71 / 70 litres

TEKA

iOven

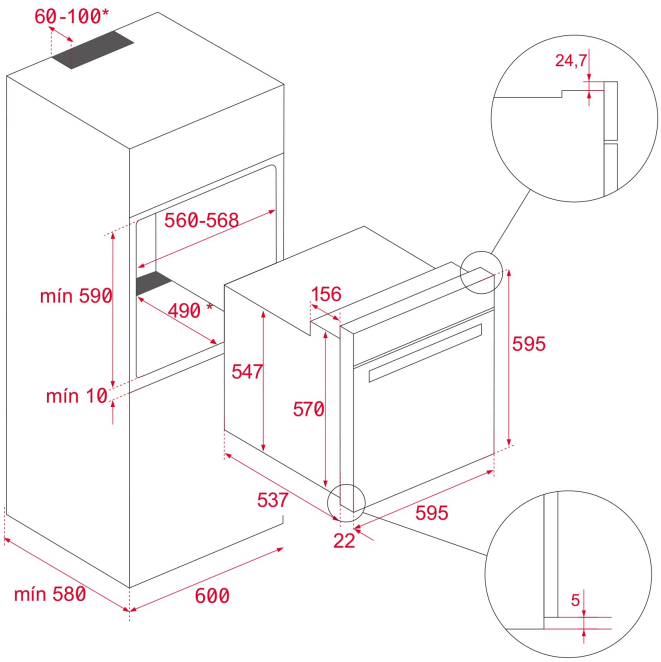

DIMENSIONS

Product height (mm): 595
Product width (mm): 595
Product depth (mm): 537+22
Product length (mm):
Net weight (Kg): 40

TECHNICAL DETAILS

FEATURES

Certificates: N / CE / CCA / CB/EAC/GMARK/SASO
Number of cavities: 1
Type of inner light: LED
Inside light position: SIDE
Enamelled cavity: Yes
Min. Temperature Regulator (ºC): 30
Max. Temperature Regulator (ºC): 270
Function selector: ELECTRONIC
Number of cooking functions: 18
Number of recipes: 50
Top + Bottom function: Yes
Grill + Bottom function: Yes
Top function: Yes
Grill function: Yes
MaxiGrill function: Yes
Top + Bottom + Fan function: Yes
Grill + Fan function: Yes
MaxiGrill + Fan function: Yes
Bottom function: Yes
Bottom + TURBO (Pizza) function: Yes
Turbo function: Yes
ECO function: Yes

Bake bread function: Yes
Ferment function: Yes
Keeping warm: Yes
Automatic quick heating: Yes
Slow Cook: Yes
Removable chromed tray guides: Yes
Number of guide levels: 5
Full extension telescopic guides: Yes
Easy slide telescopic guides: Yes
Drop-down grill: Yes
Forced refrigeration tangential 1 speed: Yes
SoftClose: Yes

ELECTRIC CONNECTION

Maximum Nominal Power (W): 3198
Frequency (Hz): 50/60
Power rate (V): 220-240
Cable Connection Length (cm): 150
Plug: Yes
Inside light Consumption (W): 4

ENERGY CONSUMPTION

Energy consumption per cycle in conventional mode (kWh): 0.88
Energy consumption per cycle in fan-forced convection mode (kWh): 0,68
Bottom Heating Element (W): 1150
Bottom Heating Element (W) (lower cavity): 1150
Grill (W): 1400
Maxi Grill (W): 2500
Traditional (W): 2550
Turbo (W): 2000
Multifunction Turbo (W): 22
Cooling Fan Motor (W): 18

SAFETY SYSTEMS

Automatic disconnection when opening the door: Yes
Panel blocking system: Yes
Children safety block option: Yes
Grill protection: Yes
Anti-tip tray system: Yes
Safety Thermostat: Yes

CLEANING SYSTEM

Crystal Clean Enamel (Slippery): Yes
Hydroclean PRO: Yes

ACCESSORIES

Baking Tray: 1
Deep Tray (50 mm): 1
The SteamBox: 1
Reinforced grid: 2
Meat Probe: 1

ENERGY EFFICIENCY

Energy Efficiency Class: A+
Energy Efficiency Index (EEI): 81

iOven
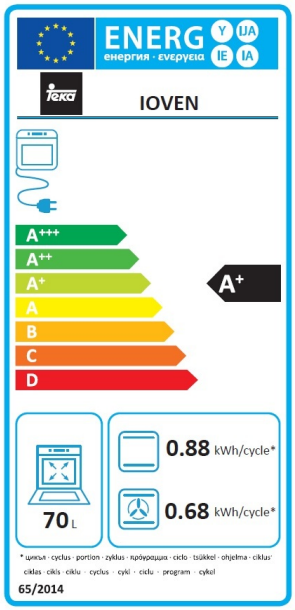
ENERGY LABEL